GS#323-024 ARPA INFR. - WASTE CENT. TREATMENT
SOUTH MISSISSIPPI CORRECTIONAL INSTITUTION
LEAKESVILLE, MISSISSIPPI

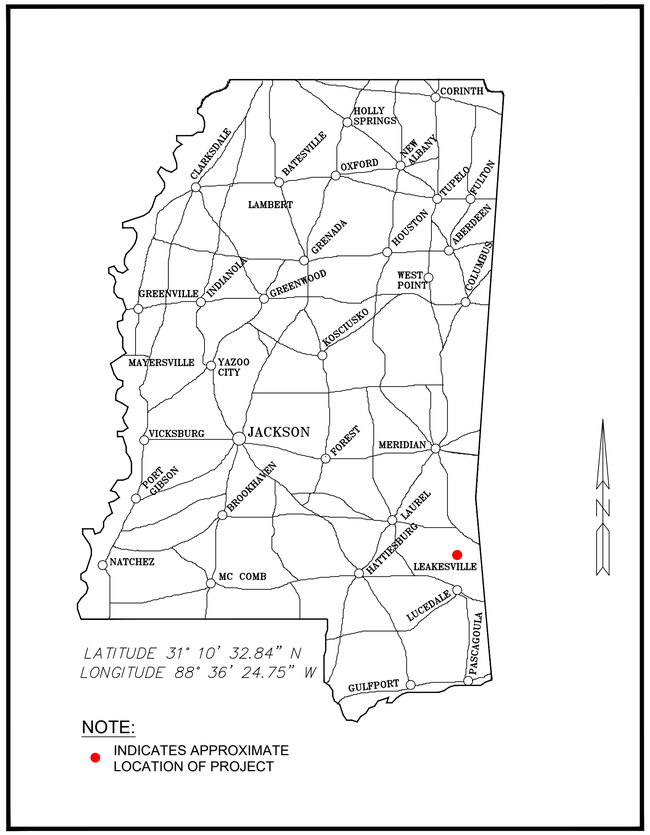

LOCATION MAP
NOT TO SCALE

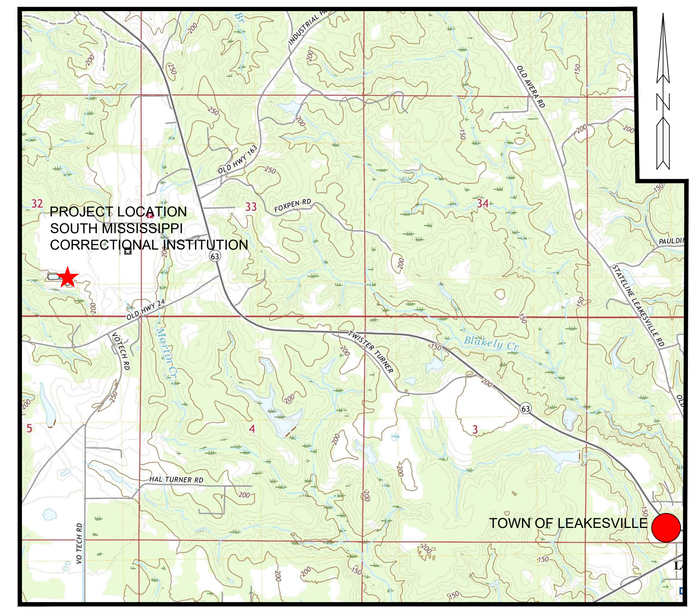

VICINITY MAP
SCALE: NOT TO SCALE

W.L. BURLE ENGINEERS, P.A.

GREENE COUNTY, MISSISSIPPI

DRAWING INDEX	
DRAWING NO.	DRAWING NAME
C-100	TITLE SHEET
C-101	DRAWING INDEX & GENERAL NOTES
C-102	PLAN VIEW - EXISTING CONDITIONS AND REQUIRED DEMOLITION
C-103	PLAN VIEW - EXISTING CONDITIONS AND REQUIRED DEMOLITION
C-104	PLAN VIEW - EXISTING CONDITIONS AND REQUIRED DEMOLITION
C-105	SECTIONS - EXISTING LAGOONS
C-200	FLOW SCHEMATIC
C-201	PLAN VIEW - REQUIRED WORK
C-202	HYDRAULIC PROFILE
C-203	PLAN VIEW - REQUIRED LAYOUT
C-204	PLAN VIEW - REQUIRED GRADING
C-205	PLAN VIEW - REQUIRED GRADING HEADWORKS
C-206	PLAN VIEW - REQUIRED GRADING FILTERS
C-207	PLAN VIEW - REQUIRED GRADING UV DISINFECTION
C-208	PLAN VIEW - REQUIRED EROSION CONTROL
C-210	PLAN VIEW - REQUIRED PIPING
C-211	PLAN & PROFILE - MH-8 TO HEADWORKS
C-212	PLAN & PROFILE - REQUIRED FORCEMAIN TO EAST LAGOON
C-213	PLAN & PROFILE - COARSE SCREEN TO INFLUENT PUMP STATION
C-214	PLAN & PROFILE - VALVE BOX TO FINE SCREEN
C-215	PLAN & PROFILE - FINE SCREEN TO EAST LAGOON
C-216	PLAN & PROFILE - NORTH CLARIFIER TO FILTER
C-217	PLAN & PROFILE - FILTER TO PARSHALL FLUME
C-218	PLAN & PROFILE - PARSHALL FLUME TO DISINFECTION SYSTEM
C-219	PLAN & PROFILE - DISINFECTION SYSTEM TO EFFLUENT PUMP STATION
C-220	PLAN & PROFILE - EFFLUENT PUMP STATION TO EXISTING FORCE MAIN
C-221	PLAN & PROFILE - WEST LAGOON TO EXISTING INFLUENT PUMP STATION
C-222	PLAN & PROFILE - SCUM PUMP STATION TO WEST LAGOON
C-223	PLAN & PROFILE - AIR BLOWERS TO EAST LAGOON
C-224	PLAN & PROFILE - AIR BLOWERS TO CLARIFIERS
C-225	PLAN & PROFILE - NORTH CLARIFIER TO SCUM PUMP STATION
C-226	PLAN & PROFILE - SOUTH CLARIFIER TO SCUM PUMP STATION
C-227	PLAN & PROFILE - RAS LINE TO EAST LAGOON
C-228	PLAN & PROFILE - WAS LINE TO WEST LAGOON
C-229	PLAN & PROFILE - MH#3 TO MH#4
C-301	PLAN VIEW - HEADWORKS
C-302	PLAN VIEW - COARSE MECHANICAL BAR SCREENS LAYOUT
C-303	PLAN VIEW - CONCRETE STRUCTURE FOR COARSE MECHANICAL BAR SCREENS
C-304	COARSE SCREEN SECTIONS & DETAILS
C-305	PLAN VIEW - FINE MECHANICAL BAR SCREENS LAYOUT
C-306	PLAN VIEW - CONCRETE STRUCTURE FOR FINE MECHANICAL BAR SCREENS
C-307	FINE SCREEN SECTIONS & DETAILS
C-310	PLAN VIEW - INFLUENT PUMP STATION
C-311	DETAILS - INFLUENT PUMP STATION
C-320	PLAN VIEW - FINE SCREEN
C-330	PLAN VIEW - PH ADJUSTMENT
C-331	PLAN VIEW - PH ADJUSTMENT GRADING
C-332	PLAN VIEW - PH ADJUSTMENT PIPING
C-401	PLAN VIEW - BIOLOGICAL TREATMENT
C-402	PLAN VIEW - REQUIRED CLARIFIER GRADING
C-403	SECTIONS - REQUIRED WORK EAST LAGOON
C-404	REQUIRED CLARIFIERS
C-405	SECTIONS - CLARIFIERS
C-406	PLAN VIEW - RETURN SLUDGE PIT
C-501	PLAN VIEW - FILTERS
C-502	SECTION - FILTERS
C-503	DETAILS - FILTERS
C-504	DETAILS - FILTER PIT PLATFORM
C-505	DETAILS - FILTER PIT STAIRS
C-601	PLAN VIEW - PARSHALL FLUME
C-602	SECTION - PARSHALL FLUME
C-701	PLAN VIEW - REQUIRED UV DISINFECTION SYSTEM
C-702	SECTION - UV DISINFECTION SYSTEM
C-703	SECTION - UV DISINFECTION SYSTEM
C-704	SECTION - UV DISINFECTION SYSTEM
C-801	PLAN VIEW - REQUIRED EFFLUENT PUMP STATION
C-802	DETAILS - REQUIRED EFFLUENT PUMP STATION
C-803	PLAN VIEW - REQUIRED SCUM PUMP STATION
C-804	DETAILS - REQUIRED SCUM PUMP STATION
C-901	DETAILS - SANITARY SEWER
C-902	DETAILS - SANITARY SEWER
C-903	DETAILS - WATER
C-904	DETAILS - PAVEMENT
C-905	DETAILS - FENCING
C-906	DETAILS - EROSION CONTROL
C-907	DETAILS - STORM SEWER
E-101	ELECTRICAL LEGEND, DRAWING INDEX, AND NOTES
E-201	OVERALL ELECTRICAL SITE PLAN
E-202	OVERALL SCADA SYSTEM PLAN
E-203	POWER RISER DIAGRAM (MAIN PLANT)
E-205	ELECTRICAL SCHEDULES
E-206	ELECTRICAL SCHEDULES
E-301	ENLARGED PLAN - HEADWORKS
E-304	ELECTRICAL DETAILS
E-305	ELECTRICAL DETAILS
E-310	ENLARGED PLAN - INFUENT PUMP STATION
E-404	ENLARGED PLAN - CLARIFIERS
E-501	ENLARGED PLAN - FILTERS AND BLOWERS
E-701	ENLARGED PLAN - UV DISINFECTION SYSTEM
E-801	ENLARGED PLAN - EFFLUENT PUMP STATION

GENERAL NOTES:

1. EXISTING INFORMATION SHOWN IS BASED UPON W.L. BURLE ENGINEERS, P.A. SURVEY DATED AUGUST 10, 2023.
2. THE CONTRACTOR SHALL BE RESPONSIBLE FOR COORDINATING HIS OPERATIONS WITH THE OWNER (BUREAU OF BUILDING, GROUNDS AND REAL PROPERTY, MANAGEMENT), AND USING AGENCY (SOUTH MISSISSIPPI CORRECTIONAL INSTITUTION) TO ENSURE ADEQUATE ACCESS TO FACILITIES AT ALL TIMES. THE CONTRACTOR SHALL BE RESPONSIBLE FOR COORDINATING TRAFFIC CONTROL WITH THE OWNER AND USING AGENCY THROUGHOUT THE COURSE OF THE PROJECT.
3. ALL CONSTRUCTION STAGING OR DEMOLITION, CONSTRUCTION FENCING, REQUIRED CONSTRUCTION AND/OR TEMPORARY DRIVES, AND REQUIRED SITE WORK SHALL CONFORM TO THE CONTRACT DOCUMENTS.
4. THE CONTRACTOR SHALL PROVIDE A TEMPORARY SAFETY FENCING AROUND OPEN EXCAVATIONS THROUGHOUT THE COURSE OF THE PROJECT. CONTRACTOR SHALL BE RESPONSIBLE FOR COORDINATING THE LAYOUT OF SAFETY FENCING WITH THE OWNER AND USING AGENCY.
5. EXISTING UNDERGROUND INSTALLATIONS, SUCH AS WATER MAINS, GAS MAINS, SANITARY/STORM SEWER LINES, TELEPHONE LINES, POWER LINES, AND BURIED STRUCTURES IN THE VICINITY OF THE WORK AREA ARE INDICATED ON THE DRAWINGS ONLY TO THE EXTENT SUCH INFORMATION HAS BEEN MADE AVAILABLE TO OR DISCOVERED BY THE PROFESSIONAL IN PREPARING THE DRAWINGS. THERE IS NO GUARANTEE AS TO THE ACCURACY OR COMPLETENESS OF UNDERGROUND UTILITY LOCATIONS SHOWN. THE CONTRACTOR SHALL BE SOLELY RESPONSIBLE FOR LOCATING AND/OR VERIFYING ALL EXISTING UNDERGROUND INSTALLATIONS AND ASSOCIATED INVERTS OR INSTALLATION DEPTHS, INCLUDING SERVICE CONNECTIONS, IN ADVANCED OF PURCHASING MATERIALS, EXCAVATING OR TRENCHING.
6. CONTRACTOR SHALL SAW CUT AND REMOVE EXISTING CONCRETE AND/OR ASPHALT PAVEMENT TO FULL DEPTH ALONG NEAT STRAIGHT LINES.
7. ALL TOP ELEVATIONS OF REQUIRED PAVEMENT REPAIRS AND ABUTMENTS SHALL MATCH FLUSH WITH TOP ELEVATIONS OF EXISTING PAVEMENTS.
8. ALL BARRICADES, WARNING SIGNS, LIGHTS, TEMPORARY SIGNALS, OTHER PROTECTIVE DEVICES, FLAGGERS AND SIGNALING DEVICES SHALL MEET OR EXCEED THE MINIMUM REQUIREMENTS CONTAINED IN THE MANUAL ON UNIFORM TRAFFIC CONTROL DEVICES (MUTCD) WHICH IS CURRENT AT THE TIME BIDS ARE RECEIVED.
9. TEMPORARY STAGING AREAS, CONSTRUCTION DRIVES, TRAFFIC CONTROL OPERATIONS AND DUMPSTER BIN RELOCATION AREAS SHALL BE COORDINATED WITH SOUTH MISSISSIPPI CORRECTIONAL INSTITUTION ADMINISTRATION AND FACILITIES MANAGEMENT PRIOR TO MOBILIZATION OF EQUIPMENT AND MATERIALS.
10. CONTRACTOR SHALL REMOVE AND REINSTALL FENCING AS REQUIRED TO COMPLETE THE REQUIRED WORK. ALL FENCING SHALL BE REINSTALLED TO THE SATISFACTION OF THE PROFESSIONAL, USING AGENCY, AND OWNER.
11. MISSISSIPPI 811 WILL NOT LOCATE UTILITIES ON SITE. CONTRACTOR SHALL RETAIN THE SERVICES OF A UTILITY LOCATION COMPANY TO LOCATE EXISTING UTILITIES.
12. INCLUDED IN THE COST FOR THIS PROJECT, CONTRACTOR SHALL BE RESPONSIBLE FOR THE SHORING/BRACING OF EXISTING UTILITIES ENCOUNTERED IN ALL EXCAVATIONS. ALL UTILITY SHORING/BRACING EFFORTS SHALL BE COORDINATED BY CONTRACTOR WITH CORRESPONDING UTILITY PROVIDERS.
13. CONTRACTOR SHALL MAINTAIN AN OPERATIONAL SANITARY SEWER COLLECTION SYSTEM AND TREATMENT PLANT THROUGHOUT THE DURATION OF THE PROJECT.
14. NO WASTEWATER SHALL BE DISCHARGED IN NATURAL WATERWAYS, STORM SEWERS, OR ON THE SURFACE. ANY DAMAGE RESULTING FROM PLUGGING LINES OR BYPASS PUMPING SHALL EXCLUSIVELY BE THE RESPONSIBILITY OF CONTRACTOR. ALL PUMPS, PLUGS, HOSES, PIPING, FITTINGS, EQUIPMENT AND NECESSARY SEWER FLOW CONTROL APPURTENANCES SHALL BE PROVIDED AND MAINTAINED BY CONTRACTOR, AT NO ADDITIONAL COST TO OWNER. LIABILITY FOR ANY DAMAGES TO PROPERTY, PUBLIC OR PRIVATE, RESULTING FROM THE ACTIVITIES OF CONTRACTOR, SHALL EXCLUSIVELY BE THE RESPONSIBILITY OF CONTRACTOR.
15. CONTRACTOR SHALL BE RESPONSIBLE FOR ANY DAMAGES CAUSED TO EXISTING UNDERGROUND INSTALLATIONS (SUCH AS SEWER LINES, GAS MAINS, WATER MAINS, ETC.) AS A RESULT OF CONSTRUCTION OPERATIONS OR EXCAVATIONS. ANY SUCH REPAIRS SHALL BE TO THE SATISFACTION OF PROFESSIONAL AND THE UTILITY OWNER AT NO ADDITIONAL COST TO OWNER.
16. CONTRACTOR SHALL REPAIR ALL INTENTIONALLY AND UNINTENTIONALLY DAMAGED AREAS TO AS-BUILT CONDITIONS, AT NO ADDITIONAL COST TO OWNER.
17. CONTRACTOR SHALL NOT BE PAID FOR ANY ADDITIONAL MOBILIZATION(S)/DEMOBILIZATION(S) TO SITE(S) FOR ANY REASON.
18. PIPING CONFLICTS SHALL BE RESOLVED ACCORDING TO THE FOLLOWING PRECEDENCE
    - PROCESS PIPING (GRAVITY). PROCESS PIPING IS DEFINED AS PIPING BETWEEN TREATMENT PROCESSES. INCLUDING REQUIRED INFLUENT AND EFFLUENT PUMP STATIONS
    - GRAVITY SEWER
    - PROCESS PRESSURE PIPING
    - NON-PROCESS SEWER PRESSURE PIPING
    - NON-POTABLE WATER PIPING
    - POTABLE WATER PIPING.
19. ALL PIPING BENDS SHALL BE RESTRAINED.

WORK SEQUENCE - BASE BID

1. PRIOR TO BEGINNING WORK, CONTRACTOR SHALL COMPLETE MISSISSIPPI DEPARTMENT OF CORRECTIONS (MDOC) VENDOR-RELEASE OF INFORMATION FORMS.
2. PREPARE A SMALL CONSTRUCTION STORMWATER POLLUTION PREVENTION PLAN (SWPPP).
3. HAVE ALL UTILITIES LOCATED WITHIN THE LIMITS OF EXCAVATIONS.
4. INSTALL REQUIRED GRAVITY SEWER PIPING AND MANHOLES BETWEEN THE WEST LAGOON AND THE EXISTING INFLUENT PUMP STATION. THIS INCLUDES MANHOLES MH#1, MH#2, MH#3, AND MH#4.
5. INSTALL REQUIRED GRAVITY SEWER PIPING AND MANHOLE MH#3A BETWEEN EXISTING MANHOLES MH#3 AND MH#4.
6. RELOCATE THE TWO (2) EXISTING AERATORS IN THE EAST LAGOON TO THE WEST LAGOON.
7. PUMP BIOSOLIDS FROM EAST LAGOON TO WEST LAGOON.
8. ONCE ALL OF THE ABOVE-MENTIONED WORK HAS BEEN COMPLETED TO THE SATISFACTION OF THE PROFESSIONAL, ALL REMAINING WORK MAY BEGIN.
9. ONCE ALL PROCESS EQUIPMENT, PIPING, AND ELECTRICAL WORK HAS BEEN COMPLETED, TREATED EFFLUENT FROM THE EXISTING EFFLUENT PUMP STATION SHALL BE DIRECTED TO THE NEWLY CONSTRUCTED COARSE SCREEN.
10. ONCE ALL PROCESS EQUIPMENT AND PUMP STATIONS HAVE BEEN ADJUSTED AND INSTALLATIONS HAVE BEEN APPROVED BY THE EQUIPMENT MANUFACTURER WHICH SUPPLIED THE EQUIPMENT AND/OR PUMPS, THE CONTRACTOR SHALL PUMP ALL MATERIAL IN THE EXISTING OXIDATION DITCH AND INTEGRAL CLARIFIER TO THE NEWLY CONSTRUCTED COARSE SCREEN AND ALL RAW SEWAGE FLOW SHALL BE DIRECTED TO THE NEW TREATMENT PLANT .

WORK SEQUENCE - ADD ALTERNATE NO. 1

1. PRIOR TO BEGINNING WORK, CONTRACTOR SHALL COMPLETE MISSISSIPPI DEPARTMENT OF CORRECTIONS (MDOC) VENDOR-RELEASE OF INFORMATION FORMS.
2. PREPARE A SMALL CONSTRUCTION STORMWATER POLLUTION PREVENTION PLAN (SWPPP).
3. HAVE ALL UTILITIES LOCATED WITHIN THE LIMITS OF EXCAVATIONS.
4. PUMP/REMOVE ALL WATER AND/OR BIOSOLIDS FROM WEST LAGOON TO THE EAST LAGOON.
5. REPLACE THE LINER IN THE WEST LAGOON.
6. INSTALL REQUIRED GRAVITY SEWER PIPING AND MANHOLES BETWEEN THE WEST LAGOON AND THE EXISTING INFLUENT PUMP STATION. THIS INCLUDES MANHOLES MH#1, MH#2, MH#3, AND MH#4.
7. INSTALL REQUIRED GRAVITY SEWER PIPING AND MANHOLE MH#3A BETWEEN EXISTING MANHOLES MH#3 AND MH#4.
8. RELOCATE THE TWO (2) EXISTING AERATORS IN THE EAST LAGOON TO THE WEST LAGOON.
9. ONCE ALL OF THE ABOVE-MENTIONED WORK HAS BEEN COMPLETED TO THE SATISFACTION OF THE PROFESSIONAL, ALL REMAINING WORK MAY BEGIN.
10. ONCE ALL PROCESS EQUIPMENT, PIPING, AND ELECTRICAL WORK HAS BEEN COMPLETED, TREATED EFFLUENT FROM THE EXISTING EFFLUENT PUMP STATION SHALL BE DIRECTED TO THE NEWLY CONSTRUCTED COARSE SCREEN.
11. ONCE ALL PROCESS EQUIPMENT AND PUMP STATIONS HAVE BEEN ADJUSTED AND INSTALLATIONS HAVE BEEN APPROVED BY THE EQUIPMENT MANUFACTURER WHICH SUPPLIED THE EQUIPMENT AND/OR PUMPS, THE CONTRACTOR SHALL PUMP ALL MATERIAL IN THE EXISTING OXIDATION DITCH AND INTEGRAL CLARIFIER TO THE NEWLY CONSTRUCTED COARSE SCREEN AND ALL RAW SEWAGE FLOW SHALL BE DIRECTED TO THE NEW TREATMENT PLANT .
1. PRIOR TO BEGINNING WORK, CONTRACTOR SHALL COMPLETE MISSISSIPPI DEPARTMENT OF CORRECTIONS (MDOC) VENDOR-RELEASE OF INFORMATION FORMS.
2. PREPARE A SMALL CONSTRUCTION STORMWATER POLLUTION PREVENTION PLAN (SWPPP).
3. HAVE ALL UTILITIES LOCATED WITHIN THE LIMITS OF EXCAVATIONS.
4. PUMP/REMOVE ALL WATER AND/OR BIOSOLIDS FROM WEST LAGOON AND DISPOSE OF OFF-SITE AT A PERMITTED SOLID WASTE DISPOSAL FACILITY.
5. REMOVE ALL BIOSOLIDS FROM THE EAST LAGOON AND DISPOSE OF OFF-SITE AT A PERMITTED SOLID WASTE DISPOSAL FACILITY.
6. REPLACE THE LINER IN THE WEST LAGOON.
7. INSTALL REQUIRED GRAVITY SEWER PIPING AND MANHOLES BETWEEN THE WEST LAGOON AND THE EXISTING INFLUENT PUMP STATION. THIS INCLUDES MANHOLES MH#1, MH#2, MH#3, AND MH#4.
8. INSTALL REQUIRED GRAVITY SEWER PIPING AND MANHOLE MH#3A BETWEEN EXISTING MANHOLES MH#3 AND MH#4.

STRUCTURAL GENERAL NOTES

DESIGN CRITERIA :

1. BUILDING CODE AND DESIGN STANDARDS

   A. 2018 INTERNATIONAL BUILDING CODE
   B. AISC MANUAL OF STEEL CONSTRUCTION, FIFTEENTH EDITION
   C. ACI 318-14 BUILDING CODE REQUIREMENTS FOR STRUCTURAL CONCRETE

GENERAL NOTES :

1. BEFORE WORK BEGINS, THE CONTRACTOR SHALL VERIFY ALL DIMENSIONS SHOWN ON THE STRUCTURAL DRAWINGS WITH DIMENSIONS SHOWN ON THE CIVIL DRAWINGS. IF ANY DISCREPANCIES EXIST, THE CONTRACTOR SHALL IMMEDIATELY NOTIFY THE CIVIL ENGINEER AND WORK SHALL NOT BEGIN UNTIL THE DISCREPANCY IS RESOLVED.
2. THE CONTRACTOR SHALL FIELD VERIFY ALL EXISTING CONDITIONS PRIOR TO SHOP DRAWING SUBMITTAL, FABRICATION AND CONSTRUCTION. THE CONTRACTOR SHALL IMMEDIATELY NOTIFY THE CIVIL ENGINEER OF ANY EXISTING CONDITIONS WHICH ARE IN CONFLICT WITH THE CONTRACT DOCUMENTS. SHOP DRAWINGS SHALL BE BASED ON FIELD VERIFIED CONDITIONS AND DIMENSIONS ONLY.
3. THE DOCUMENTS REPRESENT STRUCTURAL SYSTEMS AND COMPONENTS IN THEIR FINAL AND FINISHED STATE. THE DESIGN, ADEQUACY AND SAFETY OF ERECTION BRACING, SHORING, TEMPORARY SUPPORTS, ETC. DURING ALL INTERMEDIATE STAGES OF CONSTRUCTION IS THE SOLE RESPONSIBILITY OF THE CONTRACTOR.
4. NOTES AND SPECIFIC DETAILS SHOWN ON THE DRAWINGS SHALL TAKE PRECEDENCE OVER GENERAL STRUCTURAL NOTES AND TYPICAL DETAILS. THE CONTRACTOR SHALL CONTACT THE CIVIL ENGINEER FOR CLARIFICATION IF ANY QUESTION OR DISCREPANCY EXISTS.

FOUNDATION NOTES :

1. THE SUBSURFACE INFORMATION AND FOUNDATION DESIGN ARE BASED ON A REPORT PREPARED BY W.L. BURLE ENGINEERS, P. A.:

   GEOTECHNICAL INVESTIGATION AND ENGINEERING REPORT FOR
   GS# 323-024
   ARPA INFR. - WASTE CENT. TREATMENT
   SOUTH MISSISSIPPI CORRECTIONAL INSTITUTE
   LEAKSVILLE, MISSISSIPPI
   DATED
   AUGUST 19, 2021

2. PER THE GEOTECHNICAL REPORT, THE CONTRACTOR SHALL RETAIN THE SERVICES OF A DEWATERING EXPERT PRIOR TO CONSTRUCTION. THE CONTRACTOR SHALL FURNISH, INSTALL, MAINTAIN, AND OPERATE AT HIS EXPENSE ALL NECESSARY PUMPS, WELL POINTS, DEEP WELLS, AND/OR OTHER EQUIPMENT REQUIRED FOR DEWATERING THE VARIOUS PARTS OF THE WORK, AND FOR MAINTAINING THE FOUNDATIONS, EMBANKMENTS AND OTHER PARTS OF THE WORK, FREE FROM WATER AS REQUIRED FOR CONSTRUCTION.
3. ALLOWABLE SOIL BEARING PRESSURE - 1700 PSF
4. THE CONTRACTOR SHALL BE RESPONSIBLE FOR PROTECTION, SHORING, UNDERPINNING, BRACING, ISOLATION, ETC. OF ALL EXISTING CONDITIONS AS REQUIRED TO PREVENT ANY DISTURBANCE TO EXISTING BUILDINGS AND/OR STRUCTURES OR EXISTING CONDITIONS AS A RESULT OF THIS WORK.
5. GENERAL CONTRACTOR SHALL NOTIFY THE STRUCTURAL ENGINEER A MINIMUM OF 48 HOURS PRIOR TO PLACEMENT OF CONCRETE.
6. PLACEMENT OF ALL CONCRETE INCLUDING THE CHANNELIZING INTERIOR CONCRETE OF THE CLARIFIER SHALL BE IN PLACE BEFORE EXTERIOR BACKFILLING BEGINS.

CONCRETE NOTES :

1. CONCRETE MIX REQUIREMENTS:

   A. MIN, COMPRESSIVE STRENGTH (FC) @ 28 DAYS 4500 PSI
   B. AIR ENTRAINED 6.0%

2. THE CONTRACTOR SHALL SUBMIT ALL CONSTRUCTION JOINT PROPOSED LOCATIONS PRIOR TO CONSTRUCTION. ONLY APPROVED LOCATIONS WILL BE ACCEPTABLE FOR CONSTRUCTION JOINT LOCATIONS.
3. PROVIDE WATERSTOPS AT ALL EXPANSION, CONTRACTION, AND CONSTRUCTION JOINTS IN ALL LIQUID RETAINING STRUCTURES.

REINFORCING STEEL NOTES:

1. REINFORCING BARS SHALL CONFORM TO ASTM A615, GRADE 60. REINFORCING BARS ARE NOT TO BE WELDED.
2. CONTRACTOR SHALL PROVIDE NECESSARY REINFORCING ACCESSORIES IN ORDER TO HOLD BARS IN THE PROPER POSITION. PROVIDE CORNER BARS OF THE SAME SIZE AND NUMBER AS HORIZONTAL BARS AT ALL CORNERS AND T INTERSECTIONS.
3. LAP SPLICES SHALL BE A CLASS B TENSION LAP, UNLESS NOTED OTHERWISE.
4. CONCRETE COVER FOR REINFORCING SHALL BE AS INDICATED IN THE DRAWINGS OR 2" CLEAR IF NOT INDICATED.

STRUCTURAL STEEL:

1. ALL MAIN STRUCTURAL MEMBERS AND MISCELLANEOUS STEEL COMPONENETS SHALL CONFORM TO 304 - ASTM A-240 STAINLESS STEEL.
2. STAINLESS STEEL BOLTS FOR CONNECTIONS SHALL CONFORM TO ASTM SPECIFICATION F594 (UNLESS NOTED OTHERWISE).
3. ANCHOR BOLTS SHALL STAINLESS BE STEEL.
4. ALL CONNECTIONS FOR STRUCTURAL STEEL SHALL BE SUFFICIENT TO FULLY DEVELOP THE CONNECTED MEMBERS.
5. SUBMIT COMPLETE SHOP DRAWINGS TO ENGINEER FOR APPROVAL. DRAWINGS SHALL INDICATED THE PROFILES, SIZES, SPACING, CAMBER, ASTM GRADE, AND LOCATIONS FOR ALL STRUCTURAL MEMBERS, CONNECTIONS, ATTACHMENTS AND FASTENERS. INCLUDE SUPPLEMENTARY MEMBERS AND PARTS TO COMPLETE STRUCTURAL STEEL WORK, MISCELLANEOUS STEEL AND ANGLES FOR FRAMED OPENINGS AND HEADED SHEAR CONNECTORS.
6. SUBMIT WELDER'S QUALIFICATIONS WHICH INDICATE THAT THE WELDER HAS AWS QUALIFICATIONS FOR THE INTENDED WORK WITHIN THE PREVIOUS 12 MONTHS.

STAINLESS STEEL BAR GRATING:

1. ALL BAR GRATING SHALL BE: STANDARD-DUTY WELDED, 304 ASTM A-240 STAINLESS STEEL, 1-1/4" X 1/8" RECTANGULAR BAR SECTIONS, BY MCNICHOLS OR APPROVED EQUAL.
2. GRATING TO BEAR ON STEEL ARMORED NOTCH IN CONCRETE AS DETAILED IN THE PLANS OR STEEL ANGLES CAPABLE OF SUPPORTING THE ANTICIPATED LOADING ATTACHED TO CONCRETE. MINIMUM LIVE LOAD FOR GRATING AND BEAM DESIGN IS 60 POUNDS PER SQUARE FOOT. GRATING SUPPLIER TO SUBMIT SHOP DRAWINGS OF GRATING SECTIONS FOR REVIEW BY THE PROJECT ENGINEER.

FIBER VOIDS:

1. SUBMIT MANUFACTURER'S DATA FOR FIBER VOIDS. FIBER VOIDS SHALL BE BY SAVWAY CARTON FORMS, INC., SUREVOID PRODUCTS, INC., OR APPROVED EQUAL, AND BE OF THE SIZE INDICATED ON THE DRAWINGS. FORMS SHALL BE OF THE TYPE THAT ARE IMPREGNATED WITH PARAFFIN AND LAMINATED WITH MOISTURE RESISTANT ADHESIVE.
2. FIBER VOIDS SHALL BE DESIGNED TO SUPPORT NOT LESS THAN 1,000 POUNDS PER SQUARE FOOT. STORE FIBER VOIDS ABOVE GROUND LEVEL AND IN A DRY LOCATION. FIBER VOIDS MUST BE KEPT DRY UNTIL CONCRETE IS POURED.

W. L. BURLE
ENGINEERS, P.A.
111 South Walnut Street
Greenville, MS 38701

THOMAS MARTINEK
STATE OF MISSISSIPPI
24 Apr 2024

GS#323-024 ARPA INFR. - WASTE CENT. TREATMENT
SOUTH MISSISSIPPI CORRECTIONAL INSTITUTION
LEAKESVILLE, MISSISSIPPI

Burle Proj. No.: 08194-1-0122

File Name: C-101 - DRAWING INDEX & GENERAL NOTES.dwg

Date: 04/29/2024

Scale: N.T.S.

Drawn by: MJJ/JRG

Checked: DTM

Revisions:

Revisions:

Revisions:

DRAWING INDEX & GENERAL NOTES

C-101
Drawing Number

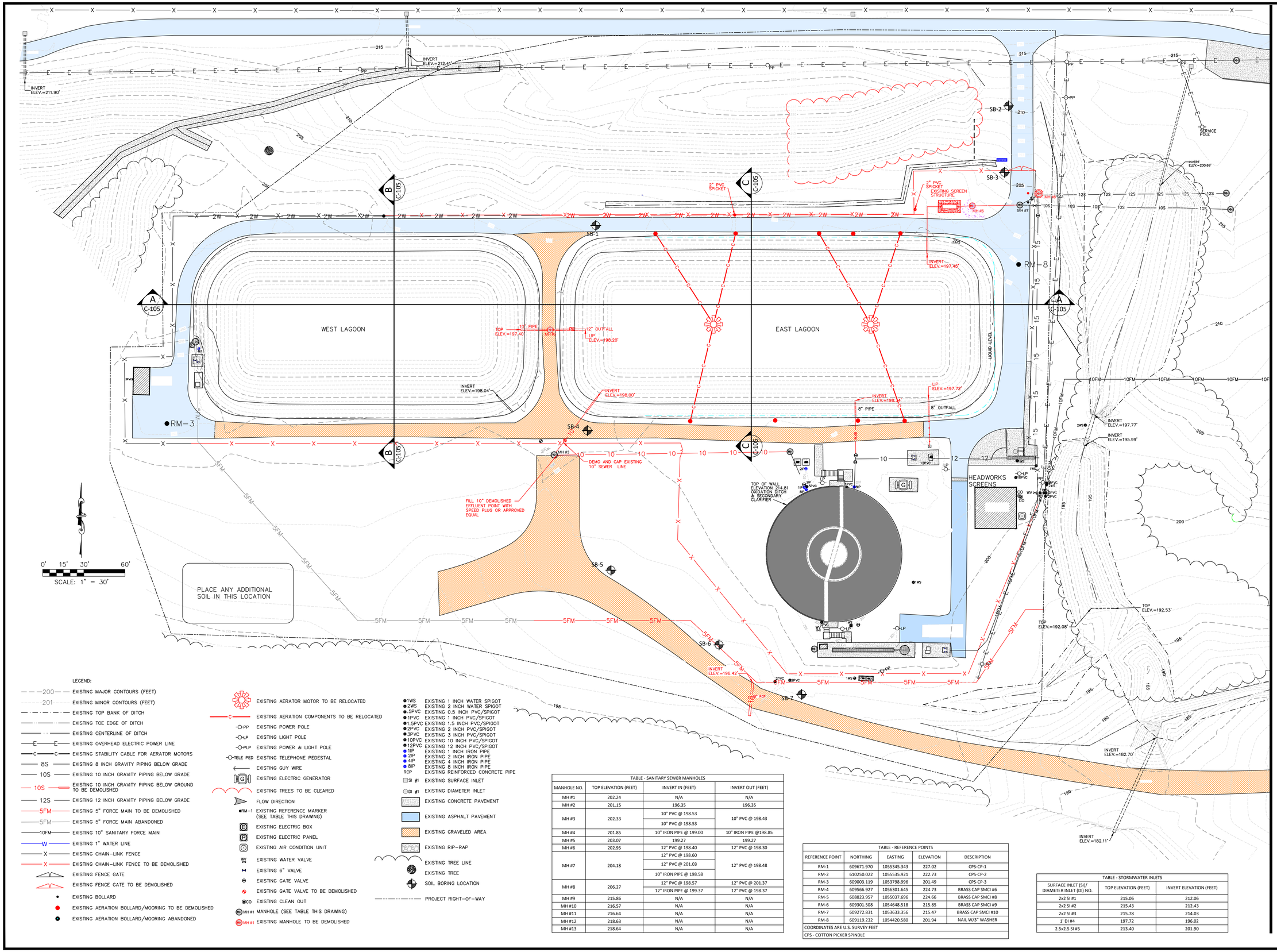

LEGEND:

- 200 — EXISTING MAJOR CONTOURS (FEET)
- 201 — EXISTING MINOR CONTOURS (FEET)
- EXISTING TOP BANK OF DITCH
- EXISTING TOE EDGE OF DITCH
- EXISTING CENTERLINE OF DITCH
- E — E — EXISTING OVERHEAD ELECTRIC POWER LINE
- C — C — EXISTING STABILITY CABLE FOR AERATOR MOTORS
- 8S — EXISTING 8 INCH GRAVITY PIPING BELOW GRADE
- 10S — EXISTING 10 INCH GRAVITY PIPING BELOW GRADE
- 10S — EXISTING 10 INCH GRAVITY PIPING BELOW GROUND TO BE DEMOLISHED
- 12S — EXISTING 12 INCH GRAVITY PIPING BELOW GRADE
- 5FM — EXISTING 5" FORCE MAIN TO BE DEMOLISHED
- 5FM — EXISTING 5" FORCE MAIN ABANDONED
- 10FM — EXISTING 10" SANITARY FORCE MAIN
- W — EXISTING 1" WATER LINE
- X — EXISTING CHAIN-LINK FENCE
- X — EXISTING CHAIN-LINK FENCE TO BE DEMOLISHED
- EXISTING FENCE GATE
- EXISTING FENCE GATE TO BE DEMOLISHED
- EXISTING BOLLARD
- EXISTING AERATION BOLLARD/MOORING TO BE DEMOLISHED
- EXISTING AERATION BOLLARD/MOORING ABANDONED
- EXISTING AERATOR MOTOR TO BE RELOCATED
- C — EXISTING AERATION COMPONENTS TO BE RELOCATED
- PP — EXISTING POWER POLE
- LP — EXISTING LIGHT POLE
- PLP — EXISTING POWER & LIGHT POLE
- TELE PED — EXISTING TELEPHONE PEDESTAL
- EXISTING GUY WIRE
- G — EXISTING ELECTRIC GENERATOR
- EXISTING TREES TO BE CLEARED
- FLOW DIRECTION
- RM-1 — EXISTING REFERENCE MARKER (SEE TABLE THIS DRAWING)
- E — EXISTING ELECTRIC BOX
- P — EXISTING ELECTRIC PANEL
- EXISTING AIR CONDITION UNIT
- WV — EXISTING WATER VALVE
- EXISTING 6" VALVE
- EXISTING GATE VALVE
- EXISTING GATE VALVE TO BE DEMOLISHED
- CO — EXISTING CLEAN OUT
- MH #1 — MANHOLE (SEE TABLE THIS DRAWING)
- MH #1 — EXISTING MANHOLE TO BE DEMOLISHED
- 1WS — EXISTING 1 INCH WATER SPIGOT
- 2WS — EXISTING 2 INCH WATER SPIGOT
- .5PVC — EXISTING 0.5 INCH PVC/SPIGOT
- 1PVC — EXISTING 1 INCH PVC/SPIGOT
- 1.5PVC — EXISTING 1.5 INCH PVC/SPIGOT
- 2PVC — EXISTING 2 INCH PVC/SPIGOT
- 3PVC — EXISTING 3 INCH PVC/SPIGOT
- 10PVC — EXISTING 10 INCH PVC/SPIGOT
- 12PVC — EXISTING 12 INCH PVC/SPIGOT
- 1IP — EXISTING 1 INCH IRON PIPE
- 2IP — EXISTING 2 INCH IRON PIPE
- 4IP — EXISTING 4 INCH IRON PIPE
- 8IP — EXISTING 8 INCH IRON PIPE
- RCP — EXISTING REINFORCED CONCRETE PIPE
- SI #1 — EXISTING SURFACE INLET
- DI #1 — EXISTING DIAMETER INLET
- EXISTING CONCRETE PAVEMENT
- EXISTING ASPHALT PAVEMENT
- EXISTING GRAVELED AREA
- EXISTING RIP-RAP
- EXISTING TREE LINE
- EXISTING TREE
- SOIL BORING LOCATION
- PROJECT RIGHT-OF-WAY

TABLE - SANITARY SEWER MANHOLES

MANHOLE NO.	TOP ELEVATION (FEET)	INVERT IN (FEET)	INVERT OUT (FEET)
MH #1	202.24	N/A	N/A
MH #2	201.15	196.35	196.35
MH #3	202.33	10" PVC @ 198.53	10" PVC @ 198.43
		10" PVC @ 198.53	
MH #4	201.85	10" IRON PIPE @ 199.00	10" IRON PIPE @198.85
MH #5	203.07	199.27	199.27
MH #6	202.95	12" PVC @ 198.40	12" PVC @ 198.30
MH #7	204.18	12" PVC @ 198.60	12" PVC @ 198.48
		12" PVC @ 201.03	
		10" IRON PIPE @ 198.58	
MH #8	206.27	12" PVC @ 198.57	12" PVC @ 201.37
		12" IRON PIPE @ 199.37	12" PVC @ 198.37
MH #9	215.86	N/A	N/A
MH #10	216.57	N/A	N/A
MH #11	216.64	N/A	N/A
MH #12	218.63	N/A	N/A
MH #13	218.64	N/A	N/A

TABLE - REFERENCE POINTS

REFERENCE POINT	NORTHING	EASTING	ELEVATION	DESCRIPTION
RM-1	609671.970	1055345.343	227.02	CPS-CP-1
RM-2	610250.022	1055535.921	222.73	CPS-CP-2
RM-3	609003.119	1053798.996	201.49	CPS-CP-3
RM-4	609566.927	1056301.645	224.73	BRASS CAP SMCI #6
RM-5	608823.957	1055037.696	224.66	BRASS CAP SMCI #8
RM-6	609301.508	1054648.518	215.85	BRASS CAP SMCI #9
RM-7	609272.831	1053633.356	215.47	BRASS CAP SMCI #10
RM-8	609119.232	1054420.580	201.94	NAIL W/3" WASHER

COORDINATES ARE U.S. SURVEY FEET
CPS - COTTON PICKER SPINDLE

TABLE - STORMWATER INLETS

SURFACE INLET (SI)/ DIAMETER INLET (DI) NO.	TOP ELEVATION (FEET)	INVERT ELEVATION (FEET)
2x2 SI #1	215.06	212.06
2x2 SI #2	215.43	212.43
2x2 SI #3	215.78	214.03
1' DI #4	197.72	196.02
2.5x2.5 SI #5	213.40	201.90

W. L. BURLE
ENGINEERS, P.A.
111 South Walnut Street
Greenville, MS 38701

GS#323-024 ARPA INFR. - WASTE
CENT. TREATMENT
SOUTH MISSISSIPPI CORRECTIONAL INSTITUTION
LEAKESVILLE, MISSISSIPPI

Burle Proj. No.: 08194-1-0122

File Name: C-102 EXISTING CONDITIONS AND REQUIRED DEMOLITION.DWG

Date: 04/29/2024

Scale: 1"=30'

Drawn by: MJJ/JRG

Checked: DTM

Revisions:

Revisions:

Revisions:

PLAN VIEW - EXISTING CONDITIONS AND REQUIRED DEMOLITION

C-102
Drawing Number

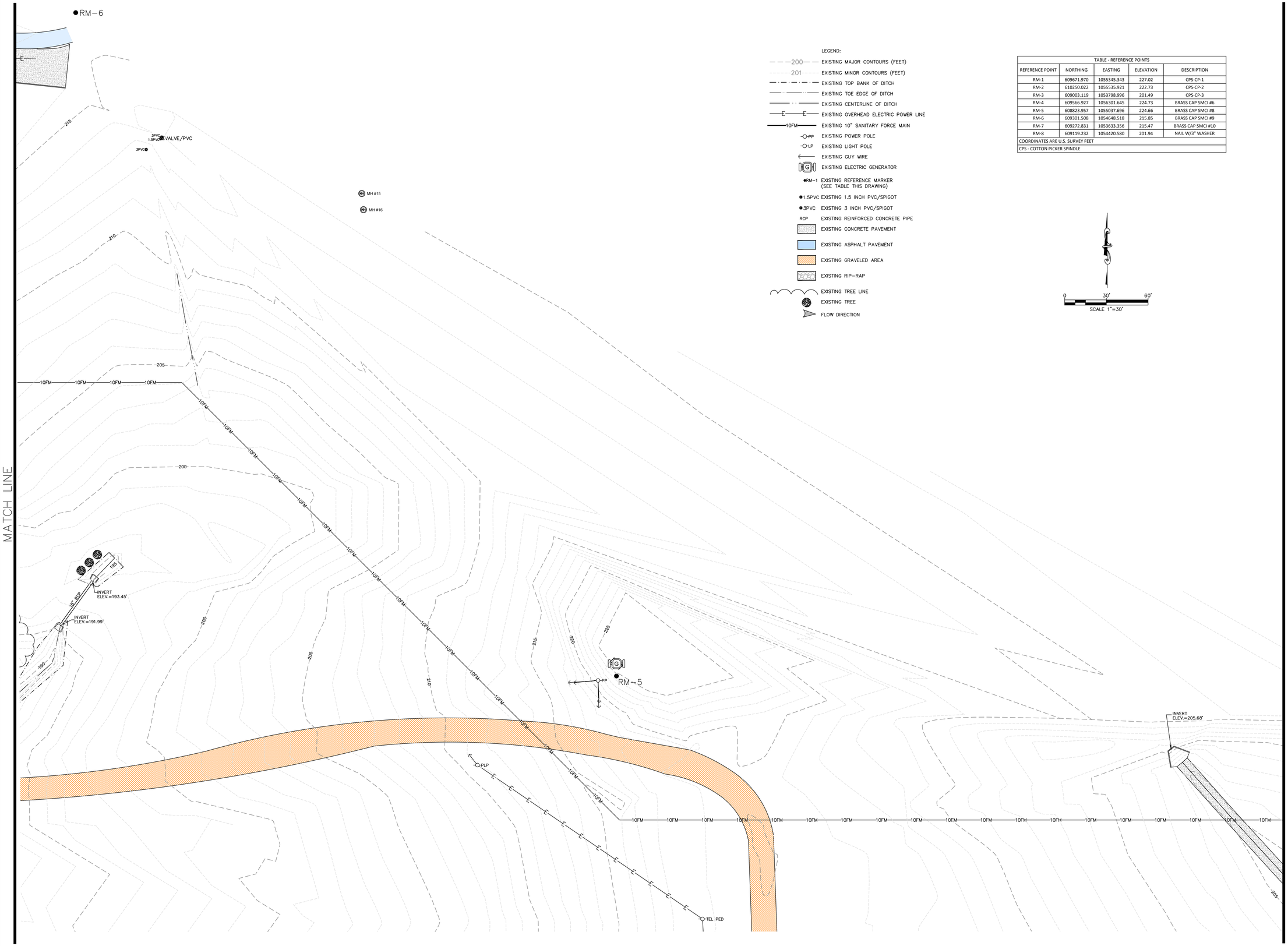

LEGEND:

- 200 EXISTING MAJOR CONTOURS (FEET)
- 201 EXISTING MINOR CONTOURS (FEET)
- EXISTING TOP BANK OF DITCH
- EXISTING TOE EDGE OF DITCH
- EXISTING CENTERLINE OF DITCH
- E EXISTING OVERHEAD ELECTRIC POWER LINE
- 10FM EXISTING 10" SANITARY FORCE MAIN
- PP EXISTING POWER POLE
- LP EXISTING LIGHT POLE
- EXISTING GUY WIRE
- G EXISTING ELECTRIC GENERATOR
- RM-1 EXISTING REFERENCE MARKER (SEE TABLE THIS DRAWING)
- 1.5PVC EXISTING 1.5 INCH PVC/SPIGOT
- 3PVC EXISTING 3 INCH PVC/SPIGOT
- RCP EXISTING REINFORCED CONCRETE PIPE
- EXISTING CONCRETE PAVEMENT
- EXISTING ASPHALT PAVEMENT
- EXISTING GRAVELED AREA
- EXISTING RIP-RAP
- EXISTING TREE LINE
- EXISTING TREE
- FLOW DIRECTION

TABLE - REFERENCE POINTS				
REFERENCE POINT	NORTHING	EASTING	ELEVATION	DESCRIPTION
RM-1	609671.970	1055345.343	227.02	CPS-CP-1
RM-2	610250.022	1055535.921	222.73	CPS-CP-2
RM-3	609003.119	1053798.996	201.49	CPS-CP-3
RM-4	609566.927	1056301.645	224.73	BRASS CAP SMCI #6
RM-5	608823.957	1055037.696	224.66	BRASS CAP SMCI #8
RM-6	609301.508	1054648.518	215.85	BRASS CAP SMCI #9
RM-7	609272.831	1053633.356	215.47	BRASS CAP SMCI #10
RM-8	609119.232	1054420.580	201.94	NAIL W/3" WASHER
COORDINATES ARE U.S. SURVEY FEET				
CPS - COTTON PICKER SPINDLE				

0 30' 60'
SCALE 1"=30'

W. L. BURLE
ENGINEERS, P.A.
111 South Walnut Street
Greenville, MS 38701

GS#323-024 ARPA INFR. - WASTE CENT. TREATMENT
SOUTH MISSISSIPPI CORRECTIONAL INSTITUTION
LEAKESVILLE, MISSISSIPPI

Burle Proj. No.: 08194-1-0122

File Name: C-103 EXISTING CONDITIONS AND REQUIRED DEMOLITION.DWG

Date: 04/29/2024

Scale: 1"=30'

Drawn by: MJJ/JRG

Checked: DTM

Revisions:

Revisions:

Revisions:

PLAN VIEW - EXISTING CONDITIONS AND REQUIRED DEMOLITION

C-103
Drawing Number

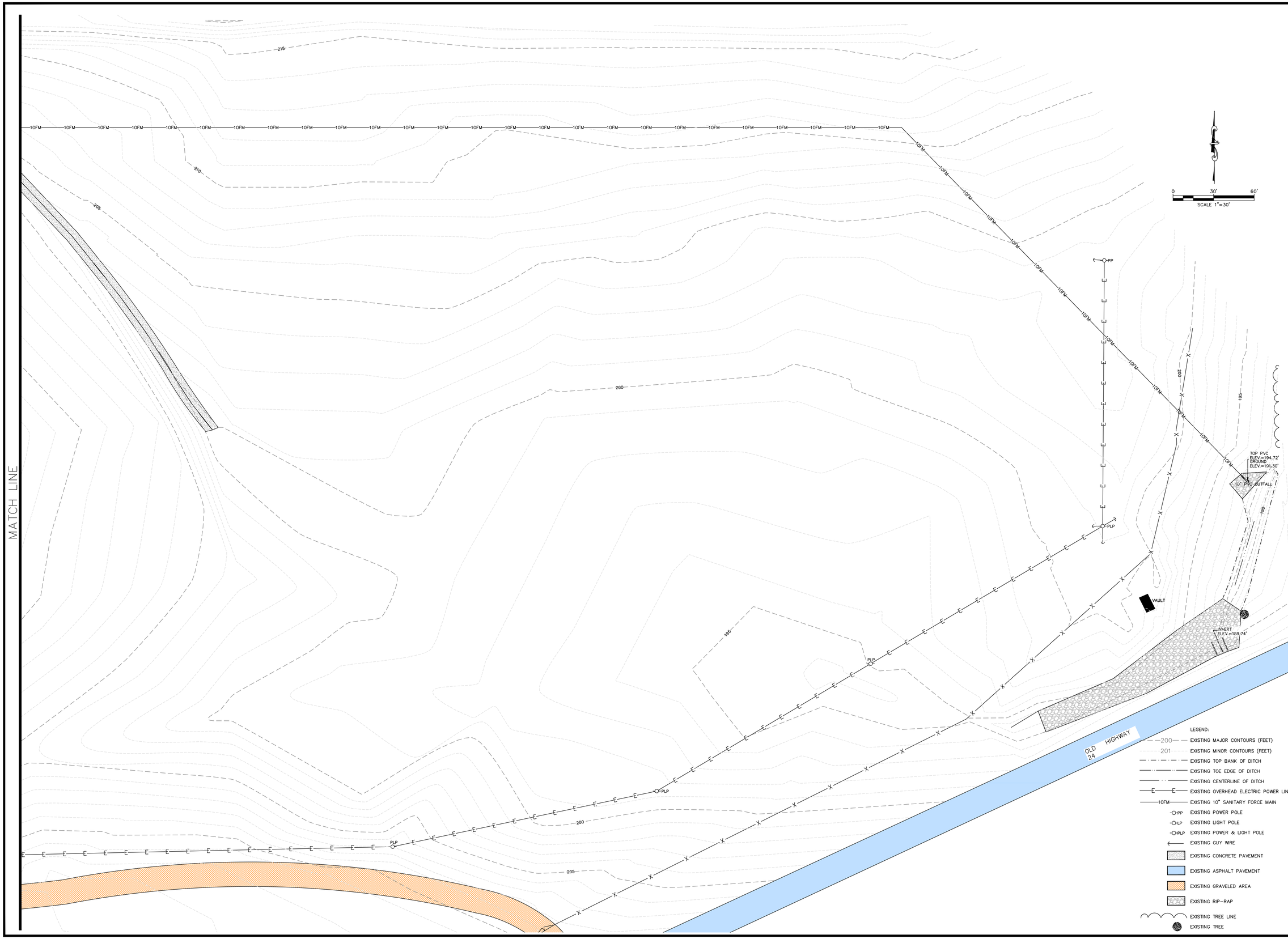

W. L. BURLE
ENGINEERS, P.A.
111 South Walnut Street
Greenville, MS 38701

GS#323-024 ARPA INFR. - WASTE CENT. TREATMENT
SOUTH MISSISSIPPI CORRECTIONAL INSTITUTION
LEAKESVILLE, MISSISSIPPI

Burle Proj. No.: 08194-1-0122

File Name: C-104 PLAN VIEW - EXISTING CONDITIONS AND REQUIRED DEMOLITION

Date: 04/24/2024

Scale: 1"=30'

Drawn by: MJJ/JRG

Checked: DTM

Revisions:

Revisions:

Revisions:

PLAN VIEW - EXISTING CONDITIONS AND REQUIRED DEMOLITION

C-104
Drawing Number

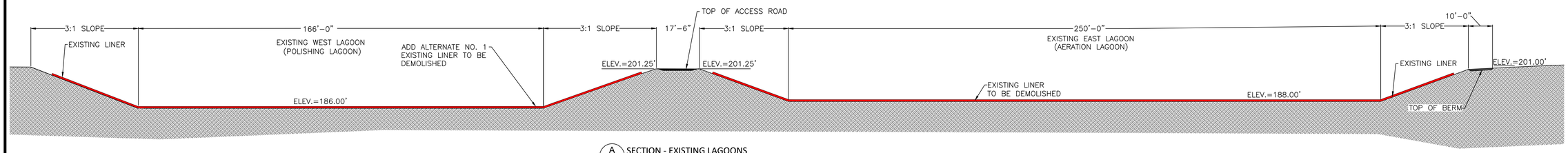

A C-105 SECTION - EXISTING LAGOONS
SCALE: 1"=20'-0"

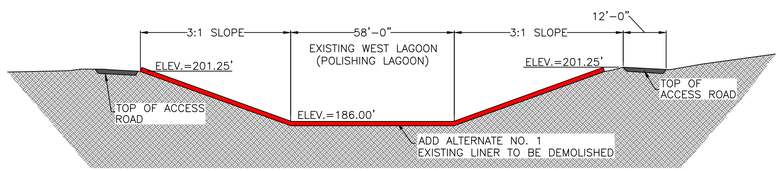

B C-105 SECTION - EXISTING WEST LAGOON
SCALE: 1"=20'-0"

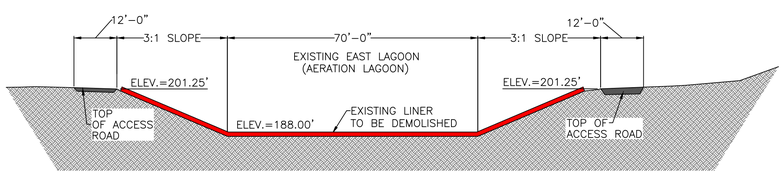

C C-105 SECTION - EXISTING EAST LAGOON
SCALE: 1"=20'-0"

W. L. BURLE
ENGINEERS, P.A.
111 South Walnut Street
Greenville, MS 38701

CONSTRUCTION DOCUMENT

GS#323-024 ARPA INFR. - WASTE
CENT. TREATMENT
SOUTH MISSISSIPPI CORRECTIONAL INSTITUTION
LEAKESVILLE, MISSISSIPPI

Burle Proj. No.: 08194-1-0122
File Name: C-105 LagoonCross-Section.dwg
Date: 04/17/2024
Scale: 1"=20'
Drawn by: MJJ/JRG
Checked: DTM
Revisions:
Revisions:
Revisions:

SECTIONS- EXISTING LAGOONS

C-105
Drawing Number

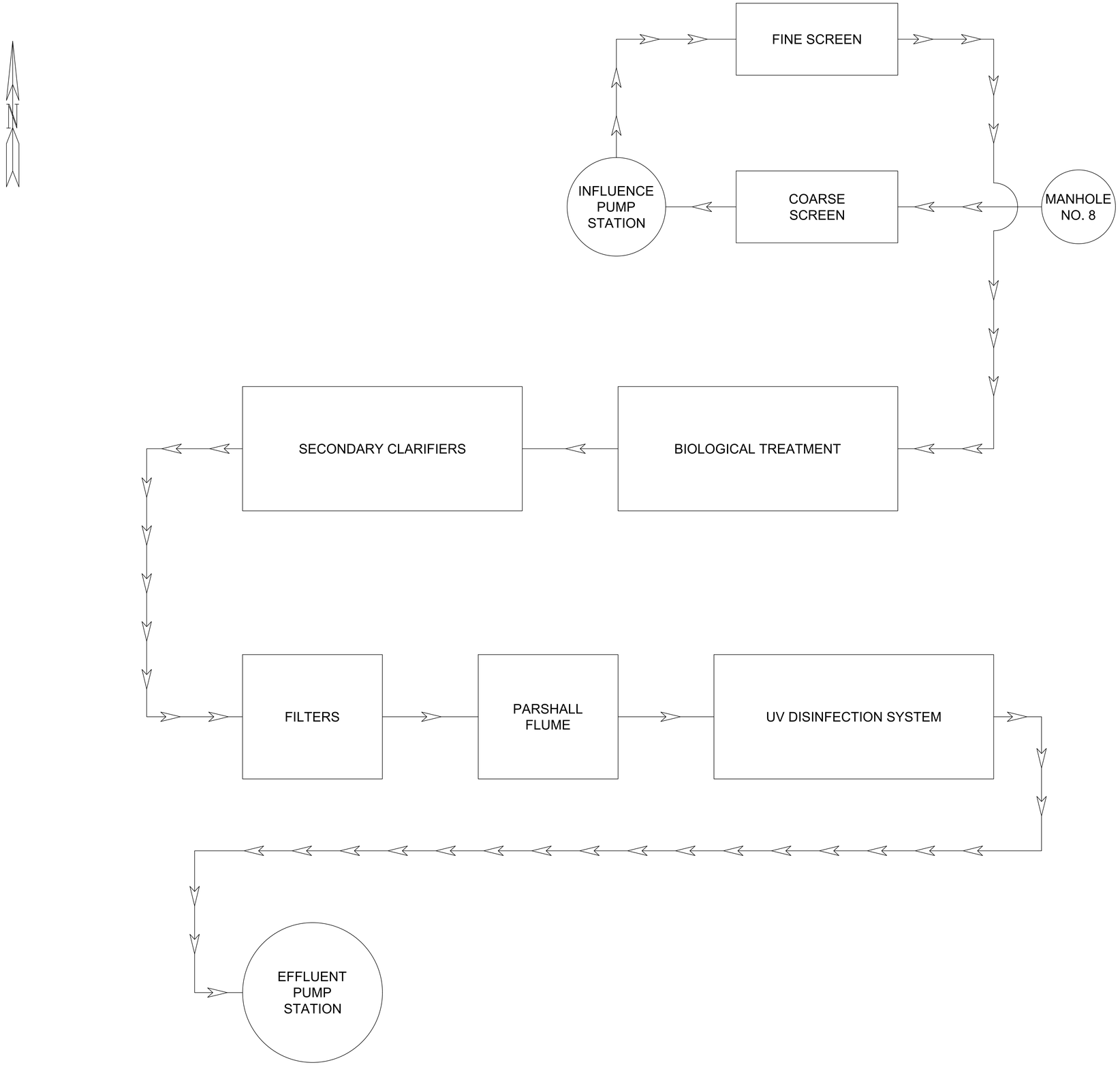

W. L. BURLE
ENGINEERS, P. A.
111 SOUTH WALNUT STREET
GREENVILLE, MS 38701

GS#323-024 ARPA INFR. - WASTE CENT. TREATMENT
SOUTH MISSISSIPPI CORRECTIONAL INSTITUTION
LEAKESVILLE, MISSISSIPPI

BURLE PROJECT NUMBER: 08194-1-0122

FILE NAME: C-200 Flow Schematic.dwg

DATE: 04/29/2024

SCALE: NOT TO SCALE

DRAWN BY: MJJ

CHECKED BY: DTM

REVISIONS:

REVISIONS:

REVISIONS:

FLOW SCHEMATIC

C-200

DRAWING NUMBER

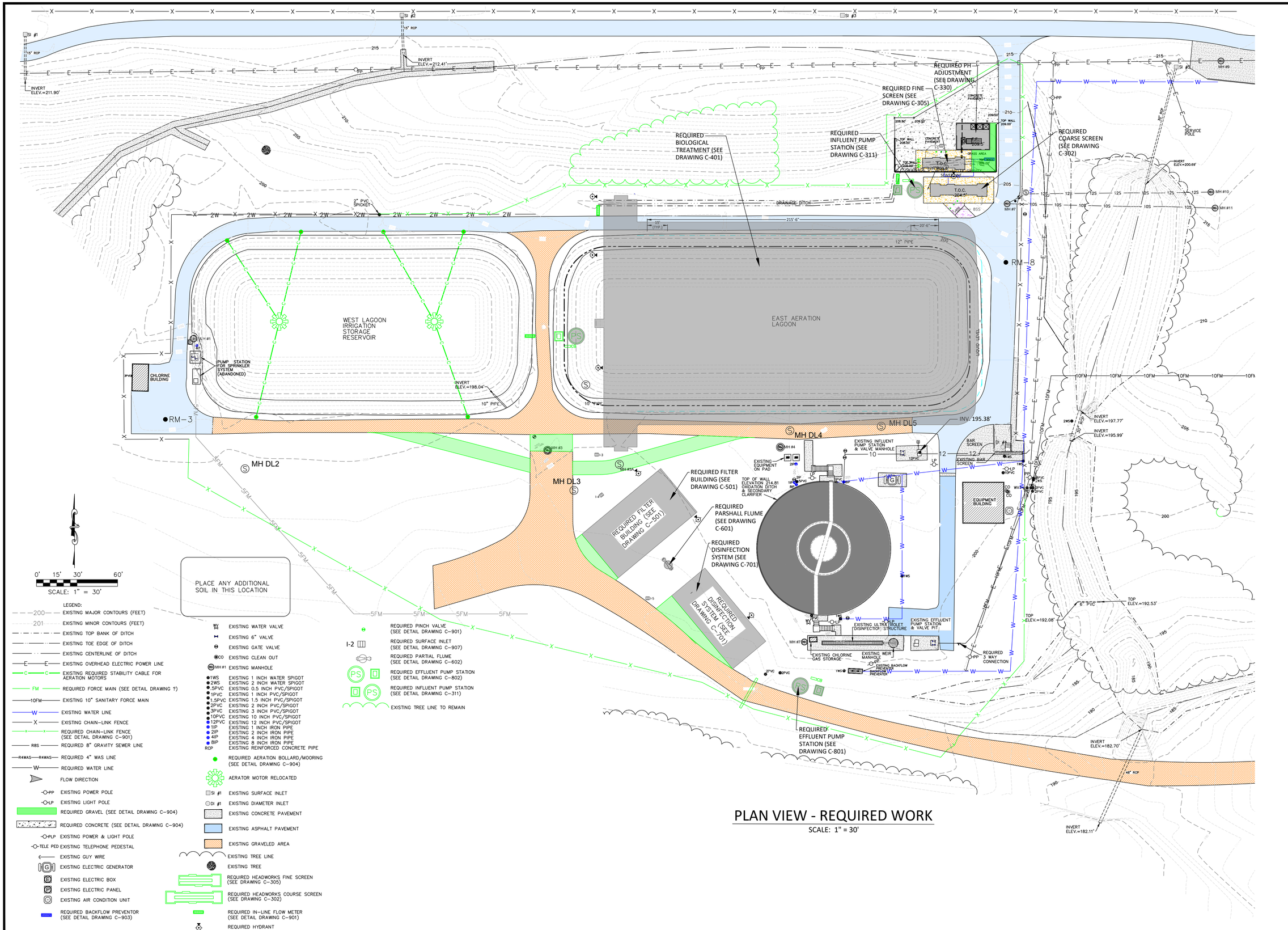

PLAN VIEW - REQUIRED WORK

SCALE: 1" = 30'

W.L. BURLE
ENGINEERS, P.A.
111 South Walnut Street
Greenville, MS 38701

GS#323-024 ARPA INFR. - WASTE CENT. TREATMENT
SOUTH MISSISSIPPI CORRECTIONAL INSTITUTION
LEAKESVILLE, MISSISSIPPI

Burle Proj. No.:	08194-1-0122
File Name:	C-201 PLAN VIEW - REQUIRED WORK.dwg
Date:	04/29/2024
Scale:	1"=30'
Drawn by:	MJJ/JRG
Checked:	DTM
Revisions:	
Revisions:	
Revisions:	

PLAN VIEW - REQUIRED WORK

C-201
Drawing Number

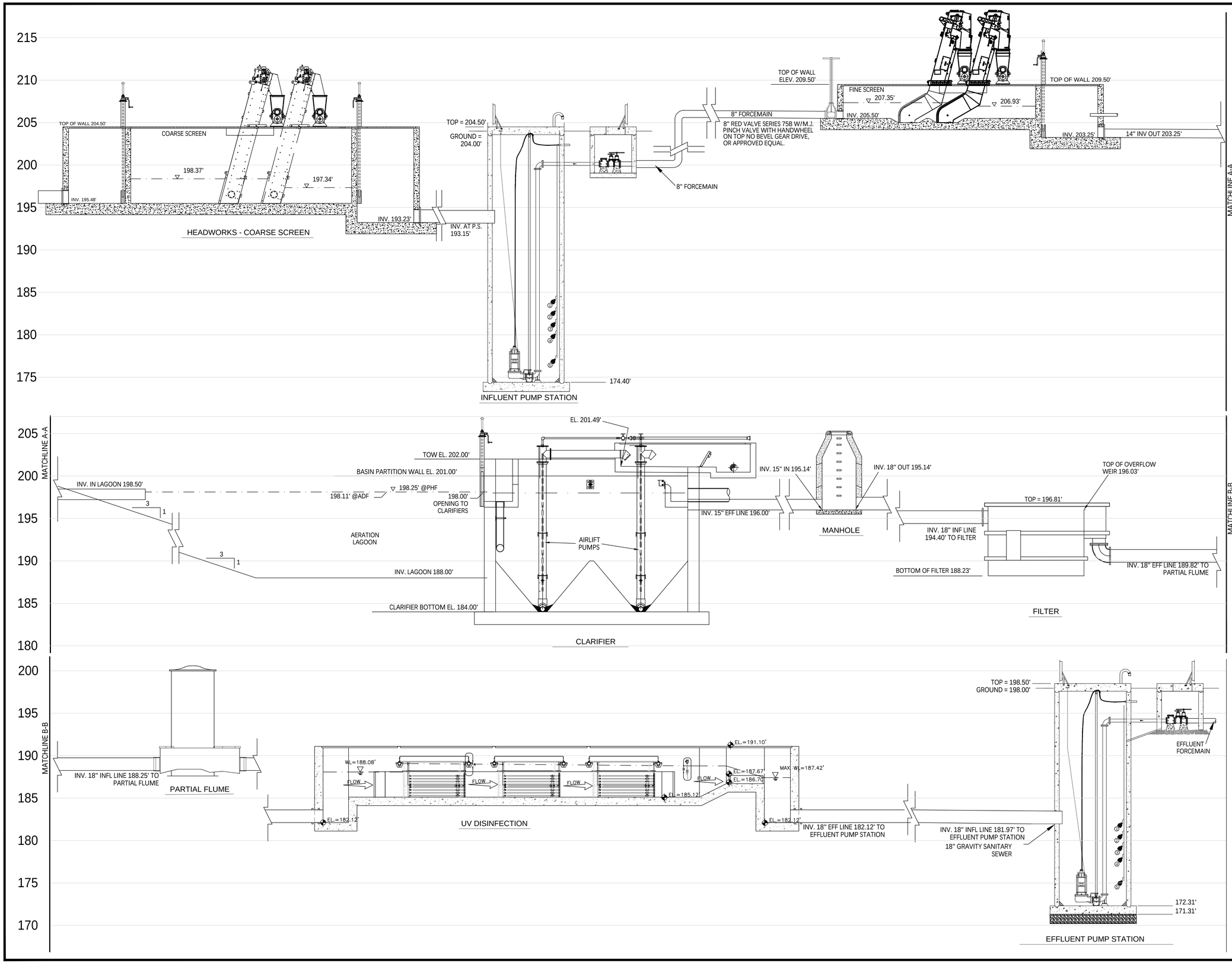

W. L. BURLE
ENGINEERS, P.A.
111 South Walnut Street
Greenville, MS 38701

GS#323-024 ARPA INFR. - WASTE CENT. TREATMENT
SOUTH MISSISSIPPI CORRECTIONAL INSTITUTION
LEAKESVILLE, MS.

Burle Proj. No.: 08194-1-0122
File Name: C-202 Hydraulic Profile.dwg
Date: 04/29/2024
Scale: 1"=10'
Drawn by: JRG
Checked: DTM
Revisions:
Revisions:
Revisions:

HYDRAULIC PROFILE

C-202
Drawing Number

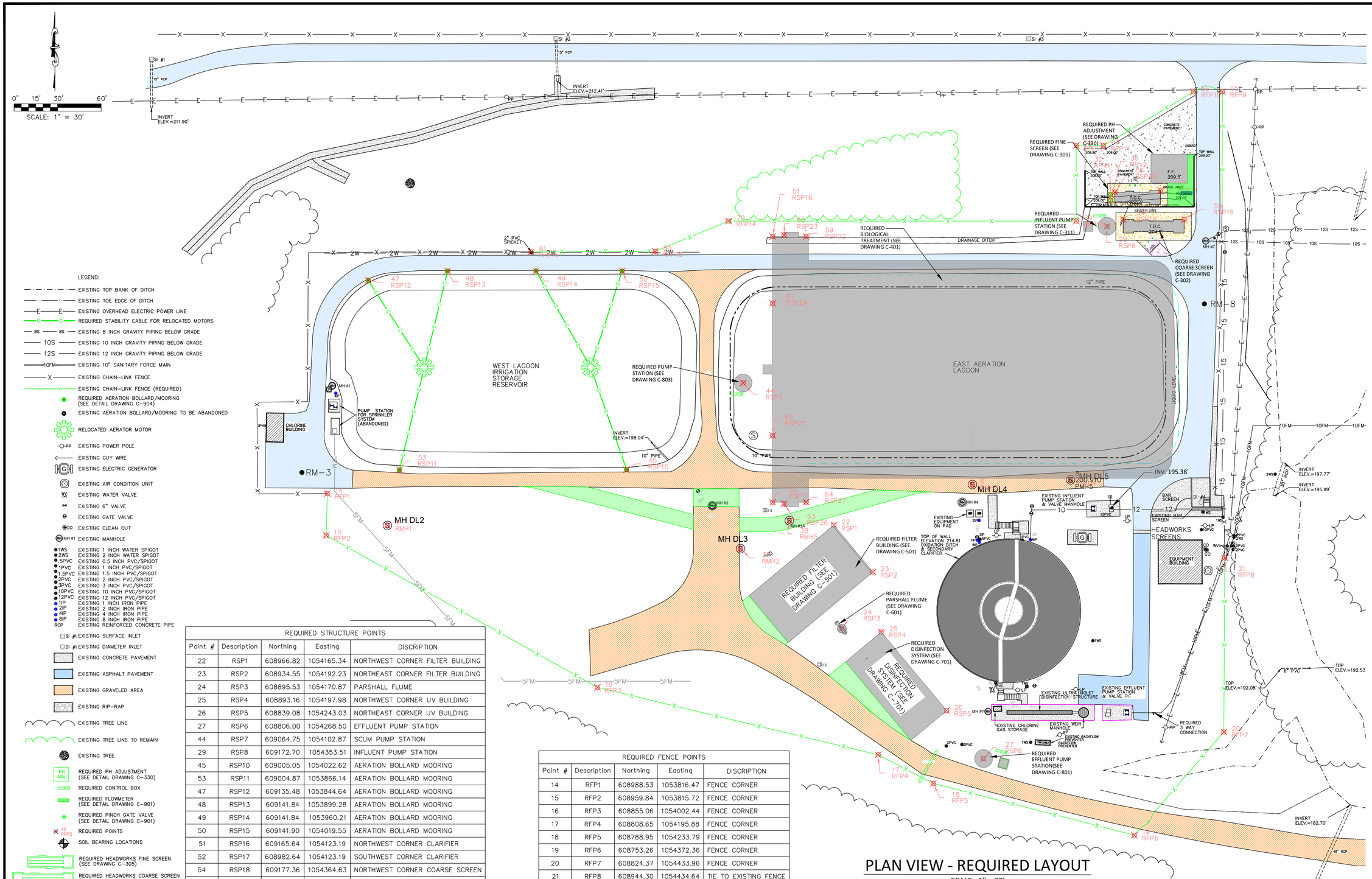

LEGEND:

- EXISTING TOP BANK OF DITCH
- EXISTING TOE EDGE OF DITCH
- EXISTING OVERHEAD ELECTRIC POWER LINE
- REQUIRED STABILITY CABLE FOR RELOCATED MOTORS
- EXISTING 8 INCH GRAVITY PIPING BELOW GRADE
- EXISTING 10 INCH GRAVITY PIPING BELOW GRADE
- EXISTING 12 INCH GRAVITY PIPING BELOW GRADE
- EXISTING 10" SANITARY FORCE MAIN
- EXISTING CHAIN-LINK FENCE
- EXISTING CHAIN-LINK FENCE (REQUIRED)
- REQUIRED AERATION BOLLARD/MOORING (SEE DETAIL DRAWING C-904)
- EXISTING AERATION BOLLARD/MOORING TO BE ABANDONED
- RELOCATED AERATOR MOTOR
- EXISTING POWER POLE
- EXISTING GUY WIRE
- EXISTING ELECTRIC GENERATOR
- EXISTING AIR CONDITION UNIT
- EXISTING WATER VALVE
- EXISTING 6" VALVE
- EXISTING GATE VALVE
- EXISTING CLEAN OUT
- EXISTING MANHOLE
- 1WS EXISTING 1 INCH WATER SPIGOT
- 2WS EXISTING 2 INCH WATER SPIGOT
- .5PVC EXISTING 0.5 INCH PVC/SPIGOT
- 1PVC EXISTING 1 INCH PVC/SPIGOT
- 1.5PVC EXISTING 1.5 INCH PVC/SPIGOT
- 2PVC EXISTING 2 INCH PVC/SPIGOT
- 3PVC EXISTING 3 INCH PVC/SPIGOT
- 10PVC EXISTING 10 INCH PVC/SPIGOT
- 12PVC EXISTING 12 INCH PVC/SPIGOT
- 1IP EXISTING 1 INCH IRON PIPE
- 2IP EXISTING 2 INCH IRON PIPE
- 4IP EXISTING 4 INCH IRON PIPE
- 8IP EXISTING 8 INCH IRON PIPE
- RCP EXISTING REINFORCED CONCRETE PIPE
- EXISTING SURFACE INLET
- EXISTING DIAMETER INLET
- EXISTING CONCRETE PAVEMENT
- EXISTING ASPHALT PAVEMENT
- EXISTING GRAVELED AREA
- EXISTING RIP-RAP
- EXISTING TREE LINE
- EXISTING TREE LINE TO REMAIN
- EXISTING TREE
- PH ADJ. REQUIRED PH ADJUSTMENT (SEE DETAIL DRAWING C-330)
- CB REQUIRED CONTROL BOX
- REQUIRED FLOWMETER (SEE DETAIL DRAWING C-901)
- REQUIRED PINCH GATE VALVE (SEE DETAIL DRAWING C-901)
- 15 RFP5 REQUIRED POINTS
- SOIL BEARING LOCATIONS
- REQUIRED HEADWORKS FINE SCREEN (SEE DRAWING C-305)
- REQUIRED HEADWORKS COARSE SCREEN (SEE DRAWING C-302)
- PS REQUIRED EFFLUENT PUMP STATION (SEE DETAIL DRAWING C-802)
- PS REQUIRED INFLUENT PUMP STATION (SEE DETAIL DRAWING C-311)
- PS REQUIRED SCUM PUMPING STATION (SEE DETAIL DRAWING C-804)
- REQUIRED SURFACE INLET (SEE DETAIL DRAWING C-907) (SEE TABLE DRAWING C-204)

REQUIRED STRUCTURE POINTS

Point #	Description	Northing	Easting	DISCRIPTION
22	RSP1	608966.82	1054165.34	NORTHWEST CORNER FILTER BUILDING
23	RSP2	608934.55	1054192.23	NORTHEAST CORNER FILTER BUILDING
24	RSP3	608895.53	1054170.87	PARSHALL FLUME
25	RSP4	608893.16	1054197.98	NORTHWEST CORNER UV BUILDING
26	RSP5	608839.08	1054243.03	NORTHEAST CORNER UV BUILDING
27	RSP6	608806.00	1054268.50	EFFLUENT PUMP STATION
44	RSP7	609064.75	1054102.87	SCUM PUMP STATION
29	RSP8	609172.70	1054353.51	INFLUENT PUMP STATION
45	RSP10	609005.05	1054022.62	AERATION BOLLARD MOORING
53	RSP11	609004.87	1053866.14	AERATION BOLLARD MOORING
47	RSP12	609135.48	1053844.64	AERATION BOLLARD MOORING
48	RSP13	609141.84	1053899.28	AERATION BOLLARD MOORING
49	RSP14	609141.84	1053960.21	AERATION BOLLARD MOORING
50	RSP15	609141.90	1054019.55	AERATION BOLLARD MOORING
51	RSP16	609165.64	1054123.19	NORTHWEST CORNER CLARIFIER
52	RSP17	608982.64	1054123.19	SOUTHWEST CORNER CLARIFIER
54	RSP18	609177.36	1054364.63	NORTHWEST CORNER COARSE SCREEN
55	RSP19	609177.36	1054406.63	NORTHEAST CORNER COARSE SCREEN
56	RSP20	609196.24	1054358.93	NORTHWEST CORNER FINE SCREEN
57	RSP21	609197.24	1054390.26	NORTHEAST CORNER FINE SCREEN
59	RSP22	609165.64	1054146.26	NORTH INFLUENT SCUM REMOVAL
60	RSP23	609166.64	1054131.00	NORTH SCUM REMOVAL
61	RSP24	609119.64	1054123.19	NORTH EFFLUENT LINE
62	RSP25	609028.64	1054123.19	SOUTH EFFLUENT LINE
63	RSP26	608981.64	1054131.00	SOUTH SCUM REMOVAL
64	RSP27	608982.64	1054146.26	SOUTH INFLUENT SCUM REMOVAL

REQUIRED FENCE POINTS

Point #	Description	Northing	Easting	DISCRIPTION
14	RFP1	608988.53	1053816.47	FENCE CORNER
15	RFP2	608959.84	1053815.72	FENCE CORNER
16	RFP3	608855.06	1054002.44	FENCE CORNER
17	RFP4	608808.65	1054195.88	FENCE CORNER
18	RFP5	608788.95	1054233.79	FENCE CORNER
19	RFP6	608753.26	1054372.36	FENCE CORNER
20	RFP7	608824.37	1054433.96	FENCE CORNER
21	RFP8	608944.30	1054434.64	TIE TO EXISTING FENCE
65	RFP9	609265.43	1054433.00	RFP9
66	RFP10	609265.31	1054413.00	FENCE CORNER
67	RFP11	609228.26	1054351.05	FENCE CORNER
68	RFP12	609228.26	1054332.30	RFP12
69	RFP13	609176.29	1054332.30	RFP13
70	RFP14	609176.29	1054092.85	RFP14
80	RFP15	609155.44	1054042.31	RFP15
81	RFP16	609155.09	1053956.87	TIE TO EXISTING FENCE

REQUIRED MANHOLE POINTS

Point #	Description	Northing	Easting	DISCRIPTION
4	RMH1	608966.60	1053857.86	RMH1
37	RMH2	608950.64	1054101.10	RMH2
6	RMH3	608994.80	1054260.82	RMH3
7	RMH4	608998.02	1054328.38	RMH4
38	RMH5	608969.89	1054134.71	RMH5

REQUIRED PINCH VALVE POINTS

Point #	Description	Northing	Easting	DISCRIPTION
30	RPV1	609194.60	1054355.93	RPV1
36	RPV2	609190.60	1054355.93	RPV2

PLAN VIEW - REQUIRED LAYOUT

SCALE: 1" = 30'

W.L. BURLE
ENGINEERS, P.A.
111 South Walnut Street
Greenville, MS 38701

GS#323-024 ARPA INFR. - WASTE CENT. TREATMENT
SOUTH MISSISSIPPI CORRECTIONAL INSTITUTION
LEAKESVILLE, MISSISSIPPI

Burle Proj. No.: 08194-1-0122

File Name: C-203 PLAN VIEW - REQUIRED LAYOUT-

Date: 04/29/2024

Scale: 1"=30'

Drawn by: MJJ/JRG

Checked: DTM

Revisions:

Revisions:

Revisions:

PLAN VIEW - REQUIRED LAYOUT

C-203
Drawing Number

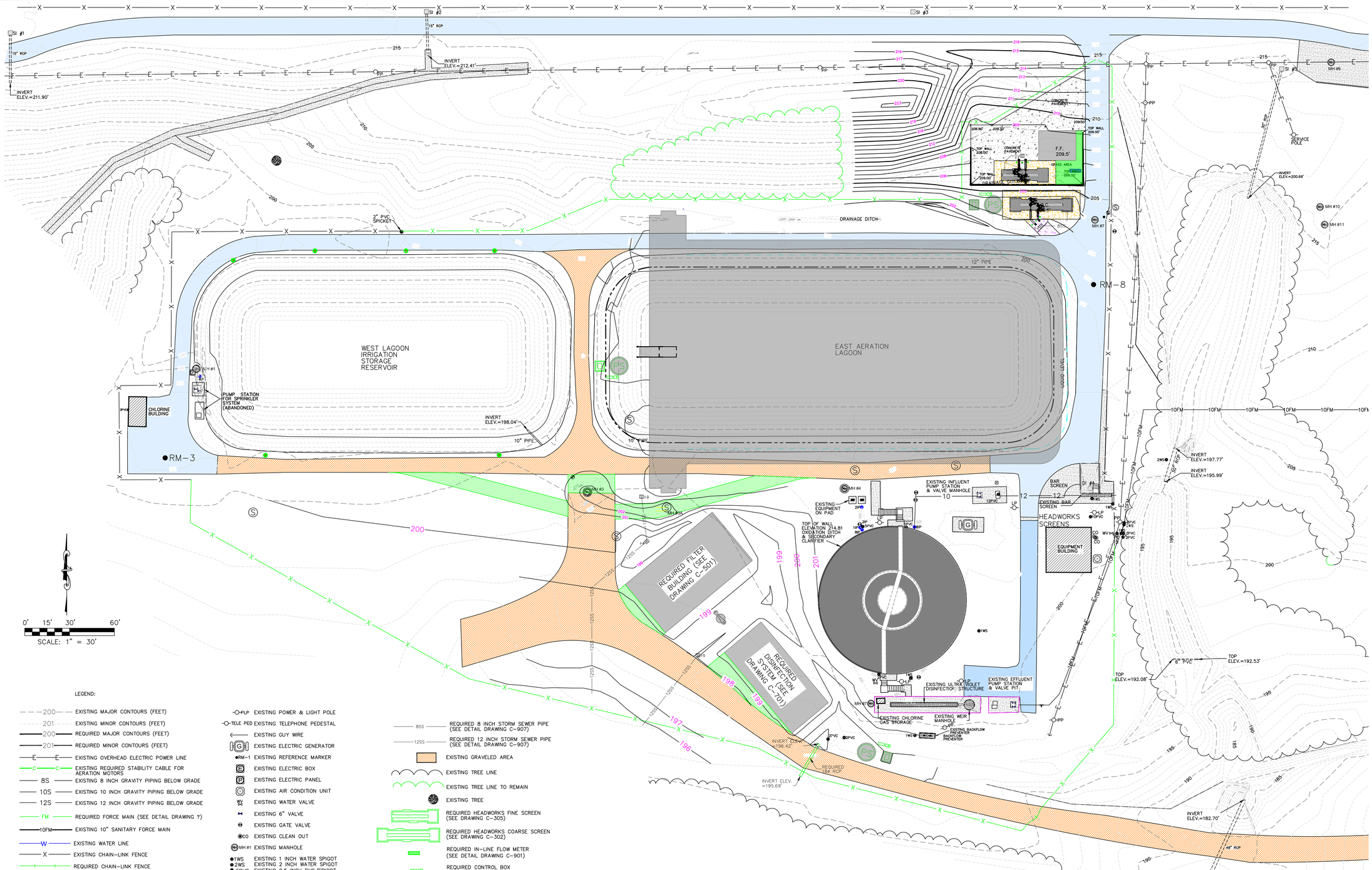

PLAN VIEW - REQUIRED GRADING

SCALE: 1" = 30'

LEGEND:

- 200 — EXISTING MAJOR CONTOURS (FEET)
- 201 — EXISTING MINOR CONTOURS (FEET)
- 200 — REQUIRED MAJOR CONTOURS (FEET)
- 201 — REQUIRED MINOR CONTOURS (FEET)
- E — E — EXISTING OVERHEAD ELECTRIC POWER LINE
- C — C — EXISTING REQUIRED STABILITY CABLE FOR AERATION MOTORS
- 8S — EXISTING 8 INCH GRAVITY PIPING BELOW GRADE
- 10S — EXISTING 10 INCH GRAVITY PIPING BELOW GRADE
- 12S — EXISTING 12 INCH GRAVITY PIPING BELOW GRADE
- FM — REQUIRED FORCE MAIN (SEE DETAIL DRAWING ?)
- 10FM — EXISTING 10" SANITARY FORCE MAIN
- W — EXISTING WATER LINE
- X — EXISTING CHAIN-LINK FENCE
- x — x — REQUIRED CHAIN-LINK FENCE (SEE DETAIL DRAWING C-901)
- R8S — REQUIRED 8" GRAVITY SEWER LINE
- R10S — REQUIRED 10" GRAVITY SEWER LINE
- FLOW DIRECTION
- REQUIRED AERATION BOLLARD/MOORING (SEE DETAIL DRAWING C-904)
- AERATOR MOTOR RELOCATED
- PP — EXISTING POWER POLE
- LP — EXISTING LIGHT POLE
- REQUIRED GRAVEL (SEE DETAIL DRAWING C-904)
- REQUIRED CONCRETE (SEE DETAIL DRAWING C-904)
- PLP — EXISTING POWER & LIGHT POLE
- TELE PED — EXISTING TELEPHONE PEDESTAL
- EXISTING GUY WIRE
- G — EXISTING ELECTRIC GENERATOR
- RM-1 — EXISTING REFERENCE MARKER
- E — EXISTING ELECTRIC BOX
- P — EXISTING ELECTRIC PANEL
- EXISTING AIR CONDITION UNIT
- EXISTING WATER VALVE
- EXISTING 6" VALVE
- EXISTING GATE VALVE
- CO — EXISTING CLEAN OUT
- MH #1 — EXISTING MANHOLE
- 1WS — EXISTING 1 INCH WATER SPIGOT
- 2WS — EXISTING 2 INCH WATER SPIGOT
- 5PVC — EXISTING 0.5 INCH PVC/SPIGOT
- 1PVC — EXISTING 1 INCH PVC/SPIGOT
- 1.5PVC — EXISTING 1.5 INCH PVC/SPIGOT
- 2PVC — EXISTING 2 INCH PVC/SPIGOT
- 3PVC — EXISTING 3 INCH PVC/SPIGOT
- 10PVC — EXISTING 10 INCH PVC/SPIGOT
- 12PVC — EXISTING 12 INCH PVC/SPIGOT
- 1IP — EXISTING 1 INCH IRON PIPE
- 2IP — EXISTING 2 INCH IRON PIPE
- 4IP — EXISTING 4 INCH IRON PIPE
- 8IP — EXISTING 8 INCH IRON PIPE
- RCP — EXISTING REINFORCED CONCRETE PIPE
- SI #1 — EXISTING SURFACE INLET
- DI #1 — EXISTING DIAMETER INLET
- EXISTING CONCRETE PAVEMENT
- EXISTING ASPHALT PAVEMENT
- 8SS — REQUIRED 8 INCH STORM SEWER PIPE (SEE DETAIL DRAWING C-907)
- 12SS — REQUIRED 12 INCH STORM SEWER PIPE (SEE DETAIL DRAWING C-907)
- EXISTING GRAVELED AREA
- EXISTING TREE LINE
- EXISTING TREE LINE TO REMAIN
- EXISTING TREE
- REQUIRED HEADWORKS FINE SCREEN (SEE DRAWING C-305)
- REQUIRED HEADWORKS COARSE SCREEN (SEE DRAWING C-302)
- FM — REQUIRED IN-LINE FLOW METER (SEE DETAIL DRAWING C-901)
- CB — REQUIRED CONTROL BOX (SEE DETAIL DRAWING E-XXX)
- REQUIRED PINCH VALVE (SEE DETAIL DRAWING C-901)
- REQUIRED PARTIAL FLUME (SEE DETAIL DRAWING C-602)
- PS — REQUIRED EFFLUENT PUMP STATION (SEE DETAIL DRAWING C-802)
- PS — REQUIRED INFLUENT PUMP STATION (SEE DETAIL DRAWING C-311)
- I-3 — REQUIRED SURFACE INLET (SEE DETAIL DRAWING C-907) (SEE TABLE THIS DRAWING)

TABLE - STORMWATER INLETS

SURFACE INLET (SI)/ DIAMETER INLET (DI) NO.	NORTHING (FEET)	EASTING (FEET)	TOP ELEVATION (FEET)	EFF. INVERT ELEVATION (FEET)	DISCHARGE LOCATION/INVERT ELEVATION (FEET)
2x2 SI #1	609205.48	1054372.85	208.80	206.36	FINE SCREEN/206.00
2x2 SI #2	609158.35	1054385.42	202.25	198.25	COARSE SCREEN/197.75
2x2 SI #3	608977.06	1054117.94	199.00	196.89	I-4/196.24
2X2 SI #4	608947.19	1054121.46	198.35	196.24	OUTFALL MO. 1
2X2 SI #5	608947.19	1054121.46	197.90	195.80	OUTFALL NO 2
OUTFALL NO 1	608845.23	1054084.67	NA	195.98	NA
OUTFALL NO 2	608823.71	1054118.43	NA	195.60	NA

W.L. BURLE
ENGINEERS, P.A.
111 South Walnut Street
Greenville, MS 38701

THOMAS BARTNER
MISSISSIPPI
29491
04/29/24

GS#323-024 ARPA INFR. - WASTE CENT. TREATMENT
SOUTH MISSISSIPPI CORRECTIONAL INSTITUTION
LEAKESVILLE, MISSISSIPPI

Burle Proj. No.: 08194-1-0122

File Name: C-204 - PLAN VIEW - REQUIRED GRADING

Date: 04/29/2024

Scale: 1"=30'

Drawn by: JRG

Checked: DTM

Revisions:

Revisions:

Revisions:

PLAN VIEW - REQUIRED GRADING

C-204
Drawing Number

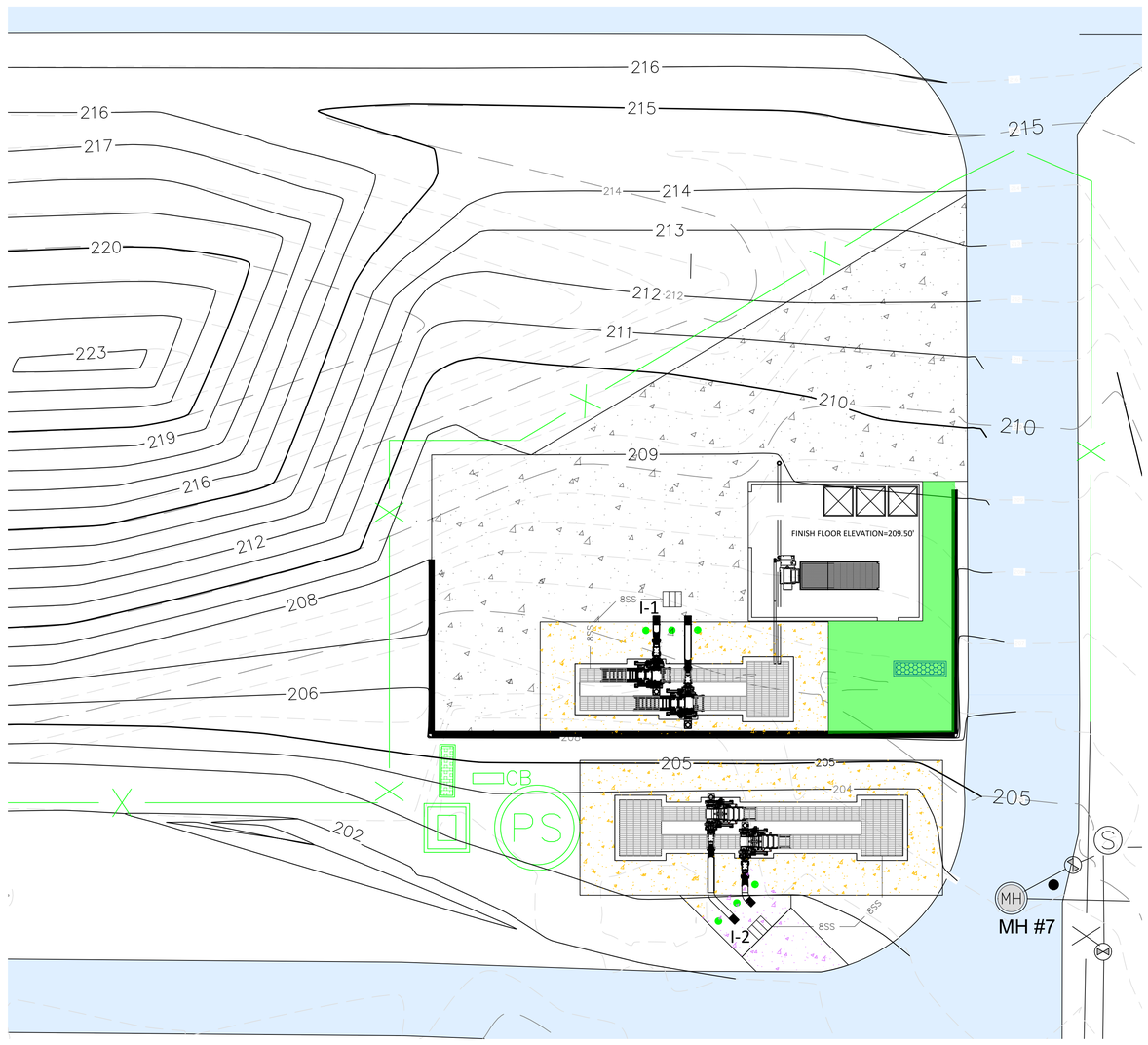

PLAN VIEW - REQUIRED GRADING HEADWORKS

SCALE: 1" = 10'

0' 5' 10' 20'

SCALE: 1" = 10'

LEGEND:

200	EXISTING MAJOR CONTOURS (FEET)
201	EXISTING MINOR CONTOURS (FEET)
200	REQUIRED MAJOR CONTOURS (FEET)
201	REQUIRED MINOR CONTOURS (FEET)
8SS	REQUIRED 8 INCH STORM SEWER PIPE (SEE DETAIL DRAWING C-907)
	REQUIRED GRAVEL (SEE DETAIL DRAWING C-904)
	REQUIRED HEADWORKS FINE SCREEN (SEE DRAWING C-305)
	REQUIRED HEADWORKS COARSE SCREEN (SEE DRAWING C-302)
PS	REQUIRED INFLUENT PUMP STATION (SEE DRAWING C-311)
	REQUIRED IN-LINE FLOWMETER (SEE DRAWING C-901)
	REQUIRED BACK FLOW PREVENTOR (SEE DRAWING C-903)
I-3	REQUIRED SURFACE INLET (SEE DETAIL DRAWING C-907) (SEE TABLE DRAWING C-204)

NOTE: PROCESS PIPING NOT SHOWN FOR CLARITY.

W. L. BURLE
ENGINEERS, P.A.
111 South Walnut Street
Greenville, MS 38701

GS#323-024 ARPA INFR. - WASTE CENT. TREATMENT
SOUTH MISSISSIPPI CORRECTIONAL INSTITUTION
LEAKESVILLE, MS.

Burle Proj. No.: 08194-1-0122

File Name: C-205 PLAN VIEW - REQUIRED GRADING HEADWORKS.DWG

Date: 04/29/2024

Scale: SHOWN

Drawn by: JRG

Checked: DTM

Revisions:

Revisions:

Revisions:

PLAN VIEW - REQUIRED GRADING HEADWORKS

C-205

Drawing Number

NOTE: PROCESS PIPING NOT SHOWN FOR CLARITY.

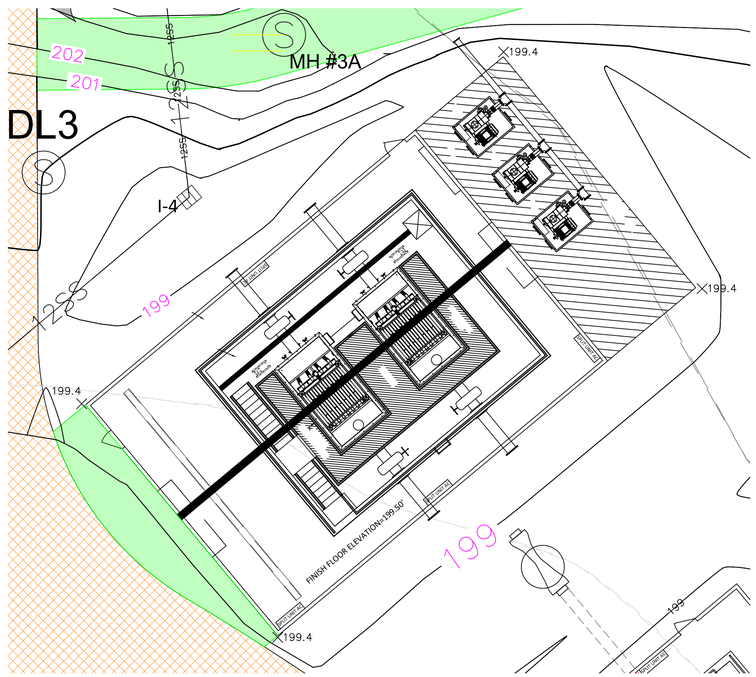

PLAN VIEW - REQUIRED GRADING FILTERS

SCALE: 1" = 10'

0' 5' 10' 20'

SCALE: 1" = 10'

LEGEND:

200	EXISTING MAJOR CONTOURS (FEET)
201	EXISTING MINOR CONTOURS (FEET)
200	REQUIRED MAJOR CONTOURS (FEET)
201	REQUIRED MINOR CONTOURS (FEET)
	REQUIRED GRAVEL (SEE DETAIL DRAWING C–904)
	EXISTING GRAVELED AREA
	REQUIRED PARTIAL FLUME (SEE DETAIL DRAWING C–602)
S	REQUIRED MANHOLE
I-3	REQUIRED SURFACE INLET (SEE DETAIL DRAWING C–907) (SEE TABLE DRAWING C–204)
×199.4	REQUIRED SPOT ELEVATION (FEET)

W. L. BURLE
ENGINEERS, P.A.
111 South Walnut Street
Greenville, MS 38701

GS#323-024 ARPA INFR. - WASTE CENT. TREATMENT
SOUTH MISSISSIPPI CORRECTIONAL INSTITUTION
LEAKESVILLE, MS.

Burle Proj. No.: 08194-1-0122

File Name: C-206 PLAN VIEW - REQUIRED GRADING FILTERS.DWG

Date: 04/29/2024

Scale: SHOWN

Drawn by: JRG

Checked: DTM

Revisions:

Revisions:

Revisions:

PLAN VIEW - REQUIRED GRADING FILTERS

C-206

Drawing Number

NOTE: PROCESS PIPING NOT SHOWN FOR CLARITY.

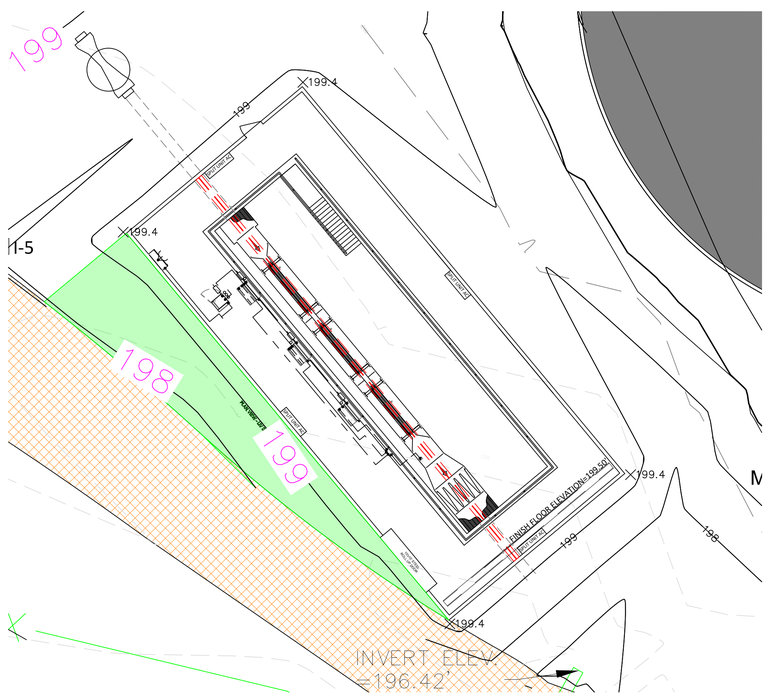

PLAN VIEW - REQUIRED GRADING UV DISINFECTION

SCALE: 1" = 10'

0' 5' 10' 20'

SCALE: 1" = 10'

LEGEND:

200	EXISTING MAJOR CONTOURS (FEET)
201	EXISTING MINOR CONTOURS (FEET)
200	REQUIRED MAJOR CONTOURS (FEET)
201	REQUIRED MINOR CONTOURS (FEET)
	REQUIRED GRAVEL (SEE DETAIL DRAWING C-904)
	EXISTING GRAVELED AREA
	REQUIRED PARTIAL FLUME (SEE DETAIL DRAWING C-602)
×199.4	REQUIRED SPOT ELEVATION (FEET)

W. L. BURLE
ENGINEERS, P.A.
111 South Walnut Street
Greenville, MS 38701

GS#323-024 ARPA INFR. - WASTE CENT. TREATMENT
SOUTH MISSISSIPPI CORRECTIONAL INSTITUTION
LEAKESVILLE, MS.

Burle Proj. No.: 08194-1-0122

File Name: C-206 PLAN VIEW - REQUIRED GRADING UV DISINFECTION.DWG

Date: 04/29/2024

Scale: SHOWN

Drawn by: JRG

Checked: DTM

Revisions:

Revisions:

Revisions:

PLAN VIEW - REQUIRED GRADING UV DISINFECTION

C-207

Drawing Number

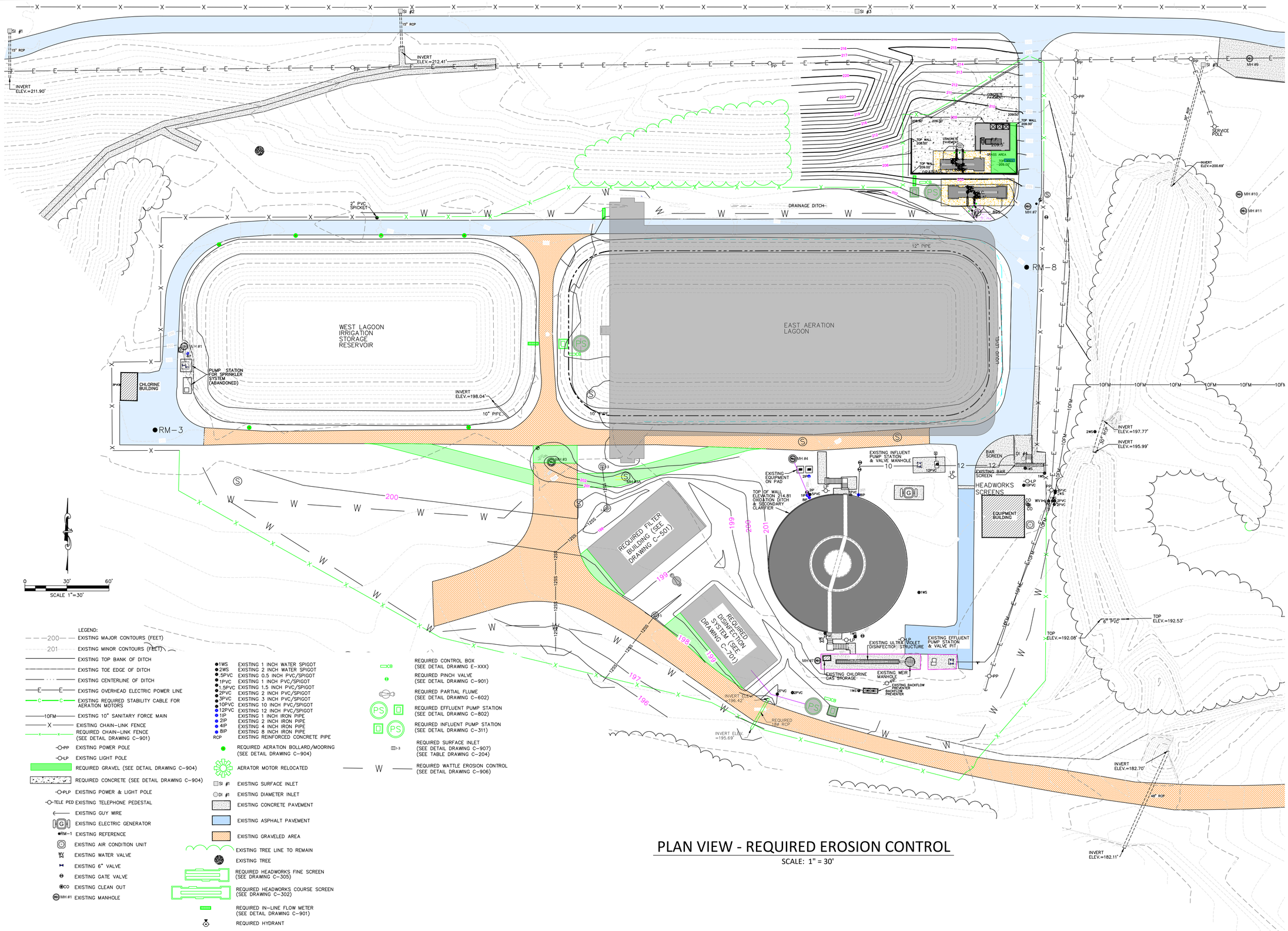

PLAN VIEW - REQUIRED EROSION CONTROL

SCALE: 1" = 30'

W.L. BURLE
ENGINEERS, P.A.
111 South Walnut Street
Greenville, MS 38701

GS#323-024 ARPA INFR. - WASTE CENT. TREATMENT
SOUTH MISSISSIPPI CORRECTIONAL INSTITUTION
LEAKESVILLE, MISSISSIPPI

Burle Proj. No.: 08194-1-0122

File Name: C-208 - PLAN VIEW - REQUIRED EROSION CONTROL.DWG

Date: 04/29/2024

Scale: 1"=30'

Drawn by: JRG

Checked: DTM

Revisions:

Revisions:

Revisions:

PLAN VIEW - REQUIRED EROSION CONTROL

C-208
Drawing Number

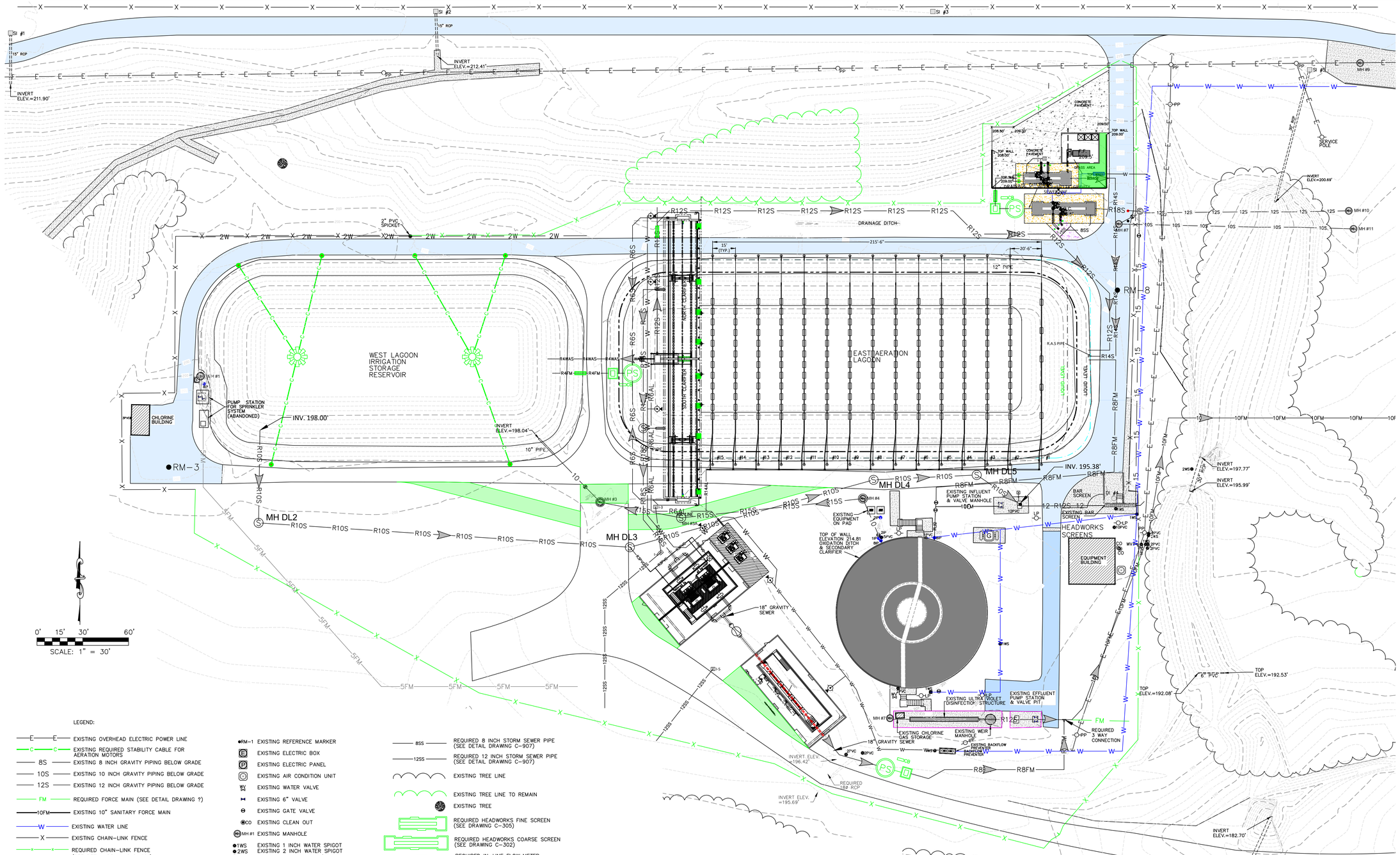

PLAN VIEW - REQUIRED PIPING

SCALE: 1" = 10'

LEGEND:

- EXISTING OVERHEAD ELECTRIC POWER LINE
- EXISTING REQUIRED STABILITY CABLE FOR AERATION MOTORS
- 8S — EXISTING 8 INCH GRAVITY PIPING BELOW GRADE
- 10S — EXISTING 10 INCH GRAVITY PIPING BELOW GRADE
- 12S — EXISTING 12 INCH GRAVITY PIPING BELOW GRADE
- FM — REQUIRED FORCE MAIN (SEE DETAIL DRAWING ?)
- 10FM — EXISTING 10" SANITARY FORCE MAIN
- W — EXISTING WATER LINE
- X — EXISTING CHAIN-LINK FENCE
- REQUIRED CHAIN-LINK FENCE (SEE DETAIL DRAWING C-901)
- R8S — REQUIRED 8" GRAVITY SEWER LINE
- R10S — REQUIRED 10" GRAVITY SEWER LINE
- FLOW DIRECTION
- REQUIRED AERATION BOLLARD/MOORING (SEE DETAIL DRAWING C-904)
- AERATOR MOTOR RELOCATED
- PP — EXISTING POWER POLE
- LP — EXISTING LIGHT POLE
- REQUIRED GRAVEL (SEE DETAIL DRAWING C-904)
- REQUIRED CONCRETE (SEE DETAIL DRAWING C-904)
- PLP — EXISTING POWER & LIGHT POLE
- TELE PED — EXISTING TELEPHONE PEDESTAL
- EXISTING GUY WIRE
- EXISTING ELECTRIC GENERATOR
- RM-1 — EXISTING REFERENCE MARKER
- EXISTING ELECTRIC BOX
- EXISTING ELECTRIC PANEL
- EXISTING AIR CONDITION UNIT
- EXISTING WATER VALVE
- EXISTING 6" VALVE
- EXISTING GATE VALVE
- CO — EXISTING CLEAN OUT
- MH #1 — EXISTING MANHOLE
- 1WS — EXISTING 1 INCH WATER SPIGOT
- 2WS — EXISTING 2 INCH WATER SPIGOT
- .5PVC — EXISTING 0.5 INCH PVC/SPIGOT
- 1PVC — EXISTING 1 INCH PVC/SPIGOT
- 1.5PVC — EXISTING 1.5 INCH PVC/SPIGOT
- 2PVC — EXISTING 2 INCH PVC/SPIGOT
- 3PVC — EXISTING 3 INCH PVC/SPIGOT
- 10PVC — EXISTING 10 INCH PVC/SPIGOT
- 12PVC — EXISTING 12 INCH PVC/SPIGOT
- 1IP — EXISTING 1 INCH IRON PIPE
- 2IP — EXISTING 2 INCH IRON PIPE
- 4IP — EXISTING 4 INCH IRON PIPE
- 8IP — EXISTING 8 INCH IRON PIPE
- RCP — EXISTING REINFORCED CONCRETE PIPE
- SI #1 — EXISTING SURFACE INLET
- DI #1 — EXISTING DIAMETER INLET
- EXISTING CONCRETE PAVEMENT
- EXISTING ASPHALT PAVEMENT
- EXISTING GRAVELED AREA
- 8SS — REQUIRED 8 INCH STORM SEWER PIPE (SEE DETAIL DRAWING C-907)
- 12SS — REQUIRED 12 INCH STORM SEWER PIPE (SEE DETAIL DRAWING C-907)
- EXISTING TREE LINE
- EXISTING TREE LINE TO REMAIN
- EXISTING TREE
- REQUIRED HEADWORKS FINE SCREEN (SEE DRAWING C-305)
- REQUIRED HEADWORKS COARSE SCREEN (SEE DRAWING C-302)
- REQUIRED IN-LINE FLOW METER (SEE DETAIL DRAWING C-901)
- PH ADJ. — REQUIRED PH ADJUSTMENT (SEE DETAIL DRAWING C-330)
- CB — REQUIRED CONTROL BOX (SEE DETAIL DRAWING E-XXX)
- REQUIRED PINCH VALVE (SEE DETAIL DRAWING C-901)
- REQUIRED PARTIAL FLUME (SEE DETAIL DRAWING C-602)
- PS — REQUIRED EFFLUENT PUMP STATION (SEE DETAIL DRAWING C-802)
- PS — REQUIRED INFLUENT PUMP STATION (SEE DETAIL DRAWING C-311)
- I-3 — REQUIRED SURFACE INLET (SEE DETAIL DRAWING C-907) (SEE TABLE DRAWING C-204)

NOTE: ARROWS ON GRAVITY PIPING, AND FORCE MAIN PIPING INDICATES FLOW DIRECTION.

STRUCTURE TABLE

STRUCTURE NAME:	INVERTS:	RIM ELEVATION	NORTHING	EASTING
DL1	INV OUT = 198.00	199.36	609027.0471	1053858.7199
DL2	INV IN = 197.51 INV OUT = 196.10	201.20	608966.6002	1053857.8558
DL3	INV IN = 195.27 INV OUT = 195.17	200.00	608950.6405	1054101.1048
DL4	INV IN = 194.61 INV OUT = 194.51	201.00	608994.7985	1054260.8207
DL5	INV IN = 194.28 INV OUT = 194.18	200.91	608998.0168	1054328.3842

Pipe Table

NAME	SIZE	LENGTH	SLOPE	MATERIAL
DL1 TO DL2	10"	60.45'	0.81%	PVC
DL2 TO DL3	10"	243.77'	0.34%	PVC
DL3 TO DL4	10"	165.71'	0.34%	PVC
DL4 TO DL5	10"	67.64'	0.34%	PVC
DL5 TO DL6	10"	34.44'	0.34%	PVC

W.L. BURLE
ENGINEERS, P.A.
111 South Walnut Street
Greenville, MS 38701

GS#323-024 ARPA INFR. - WASTE CENT. TREATMENT
SOUTH MISSISSIPPI CORRECTIONAL INSTITUTION
LEAKESVILLE, MISSISSIPPI

Burle Proj. No.: 08194-1-0122

File Name: C-210 - PLAN VIEW - REQUIRED PIPING.dwg

Date: 04/29/2024

Scale: 1"=30'

Drawn by: MJJ/JRG

Checked: DTM

Revisions:

Revisions:

Revisions:

PLAN VIEW - REQUIRED PIPING

C-210
Drawing Number

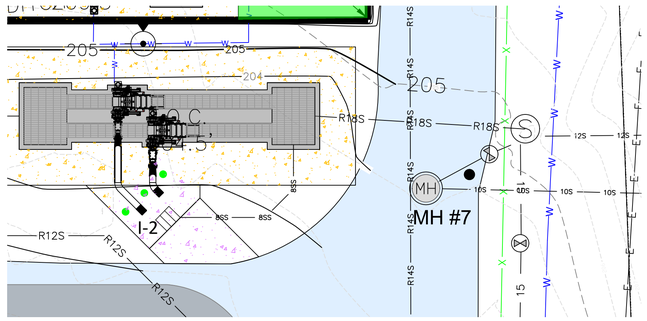

PLAN VIEW
MH-8 TO COARSE SCREEN
SCALE: 1"=10'

0' 5' 10' 20'
SCALE: 1" = 10'

LEGEND:

- 200 — EXISTING MAJOR CONTOURS (FEET)
- 201 — EXISTING MINOR CONTOURS (FEET)
- 200 — REQUIRED MAJOR CONTOURS (FEET)
- 201 — REQUIRED MINOR CONTOURS (FEET)
- EXISTING TOP BANK OF DITCH
- EXISTING TOE EDGE OF DITCH
- EXISTING CENTERLINE OF DITCH
- 12S — EXISTING 12 INCH GRAVITY PIPING BELOW GRADE
- W — EXISTING WATER LINE
- X — EXISTING CHAIN-LINK FENCE
- W — REQUIRED WATER LINE
- 8SS — REQUIRED 8 INCH STORM SEWER PIPE (SEE DETAIL DRAWING C-907)
- FLOW DIRECTION
- MH #1 — EXISTING MANHOLE
- EXISTING ASPHALT PAVEMENT
- REQUIRED 4" CONCRETE (SEE DETAIL DRAWING C-904)
- REQUIRED 8" CONCRETE (SEE DETAIL DRAWING C-904)
- REQUIRED HYDRANT (SEE DETAIL DRAWING C-903)
- REQUIRED BOLLARD (SEE DETAIL DRAWING C-904)
- REQUIRED HEADWORKS COARSE SCREEN (SEE DRAWING C-302)
- I-3 — REQUIRED SURFACE INLET (SEE DETAIL DRAWING C-907) (SEE TABLE DRAWING C-204)

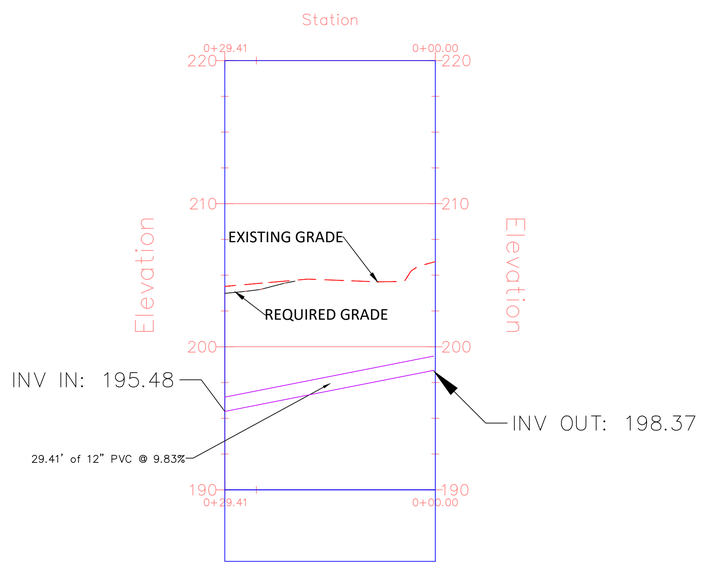

PROFILE VIEW
MH-8 TO COARSE SCREEN
SCALE: 1"=10'H/1"=5'V

STRUCTURE TABLE				
STRUCTURE NAME:	INVERTS:	RIM ELEVATION	NORTHING	EASTING
COARSE SCREEN		199.45	609170.8864	1054435.3184
MH-8	INV OUT = 198.37	199.45	609170.8864	1054435.3184

Pipe Table				
NAME	SIZE	LENGTH	SLOPE	MATERIAL
MH-8 TO HEADWORKS	12"	29.41'	9.83%	PVC

W.L. BURLE
ENGINEERS, P.A.
111 South Walnut Street
Greenville, MS 38701

THOMAS MATTHEW GRIFFIN
LICENSED PROFESSIONAL ENGINEER
No. 18918
STATE OF MISSISSIPPI
24 April 24

GS#323-024 ARPA INFR. - WASTE CENT. TREATMENT
SOUTH MISSISSIPPI CORRECTIONAL INSTITUTION
LEAKESVILLE, MISSISSIPPI

Burle Proj. No.: 08194-1-0122
File Name: PLAN AND PROFILES.dwg
Date: 04/29/2024
Scale: AS SHOWN
Drawn by: MJJ/JRG
Checked: DTM
Revisions:
Revisions:
Revisions:

PLAN & PROFILE - MH-8 TO HEADWORKS

C-211
Drawing Number

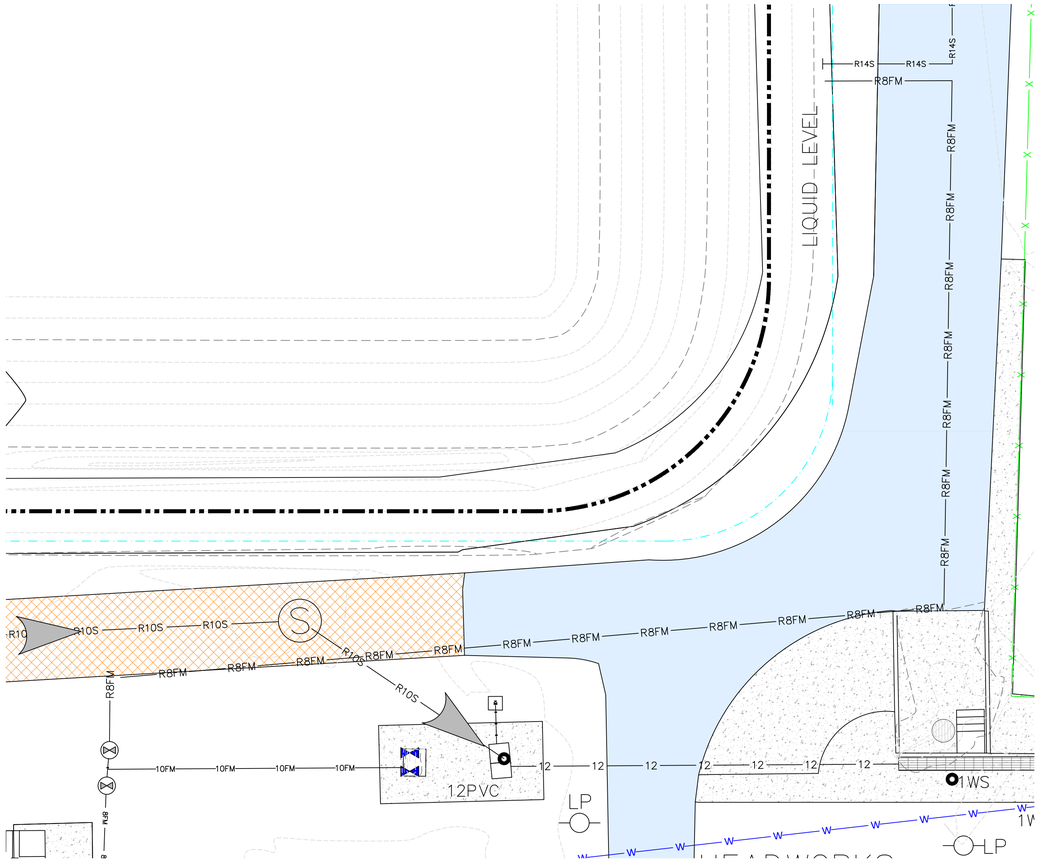

PLAN VIEW -
EXISTING FORCEMAIN TO EAST LAGOON
SCALE: 1"=10'

0' 5' 10' 20'
SCALE: 1" = 10'

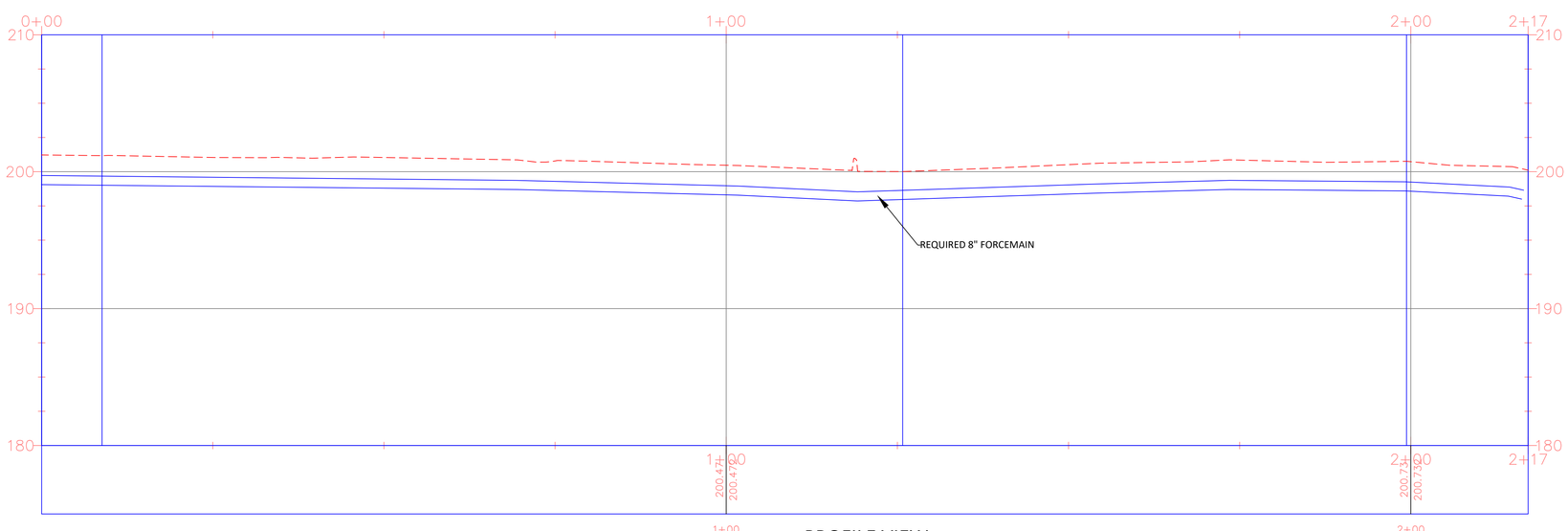

PROFILE VIEW
EXISTING FORCEMAIN TO EAST LAGOON
SCALE: 1"=10'H/1"=5'V

LEGEND:

200	EXISTING MAJOR CONTOURS (FEET)
201	EXISTING MINOR CONTOURS (FEET)
200	REQUIRED MAJOR CONTOURS (FEET)
201	REQUIRED MINOR CONTOURS (FEET)
	EXISTING TOP BANK OF DITCH
	EXISTING TOE EDGE OF DITCH
	EXISTING CENTERLINE OF DITCH
R8FM	REQUIRED 8" FORCE MAIN
R12S	REQUIRED 12" GRAVITY SEWER LINE
W	EXISTING WATER LINE
10FM	EXISTING 10" SANITARY FORCE MAIN
R14S	REQUIRED 14" GRAVITY SEWER LINE
R10S	REQUIRED 10" GRAVITY SEWER LINE
10FM	REQUIRED 10" FORCE MAIN
12	REQUIRED 12" FORCE MAIN
	REQUIRED CHAIN-LINK FENCE (SEE DETAIL DRAWING C-901)
LP	EXISTING LIGHT POLE
1WS	EXISTING 1 INCH WATER SPIGOT
S	REQUIRED MANHOLE
	FLOW DIRECTION
	REQUIRED BOLLARD (SEE DRAWING C-904)
	EXISTING ASPHALT PAVEMENT
	EXISTING 6" VALVE
12PVC	EXISTING 12 INCH PVC/SPIGOT
LP	EXISTING LIGHT POLE

W. L. BURLE
ENGINEERS, P.A.
111 South Walnut Street
Greenville, MS 38701

GS#323-024 ARPA INFR. - WASTE CENT. TREATMENT
SOUTH MISSISSIPPI CORRECTIONAL INSTITUTION
LEAKESVILLE, MISSISSIPPI

Burle Proj. No.: 08194-1-0122
File Name: PLAN AND PROFILES.dwg
Date: 04/29/2024
Scale: AS SHOWN
Drawn by: MJJ/JRG
Checked: DTM
Revisions:
Revisions:
Revisions:

PLAN & PROFILE - REQUIRED FORCEMAIN TO EAST LAGOON

C-212
Drawing Number

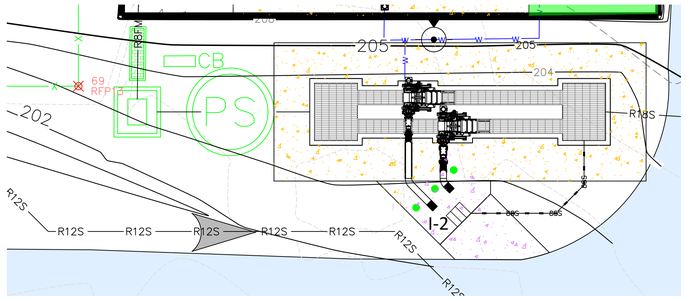

PLAN VIEW
COARSE SCREEN TO INFLUENT PUMP STATION
SCALE: 1"=10'

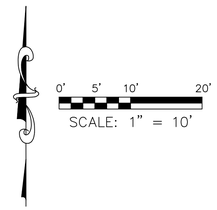

LEGEND:

- 200 — EXISTING MAJOR CONTOURS (FEET)
- 201 — EXISTING MINOR CONTOURS (FEET)
- 200 — REQUIRED MAJOR CONTOURS (FEET)
- 201 — REQUIRED MINOR CONTOURS (FEET)
- REQUIRED 8 INCH STORM SEWER PIPE (SEE DETAIL DRAWING C-907)
- R12S — REQUIRED 12" GRAVITY SEWER LINE
- R18S — REQUIRED 18" GRAVITY SEWER LINE
- PS — REQUIRED INFLUENT PUMP STATION (SEE DETAIL DRAWING C-310)
- REQUIRED MECHANICAL COARSE SCREEN (SEE DRAWING C-302)
- REQUIRED IN-LINE FLOW METER (SEE DRAWING C-901)
- FLOW DIRECTION
- REQUIRED BOLLARD (SEE DRAWING C-904)
- EXISTING ASPHALT PAVEMENT
- REQUIRED 4" CONCRETE (SEE DETAIL DRAWING C-904)
- REQUIRED 8" CONCRETE (SEE DETAIL DRAWING C-904)
- REQUIRED HYDRANT (SEE DETAIL DRAWING C-903)
- I-3 — REQUIRED SURFACE INLET (SEE DETAIL DRAWING C-907) (SEE TABLE DRAWING C-204)

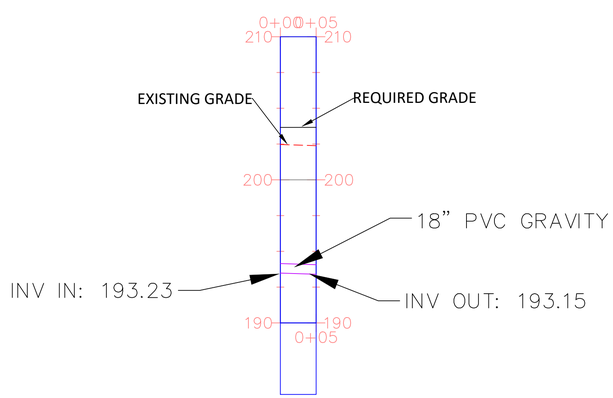

PROFILE VIEW
COARSE SCREEN TO INFLUENT PUMP STATION
SCALE: 1"=10'H/1"=5'V

W.L. BURLE
ENGINEERS, P.A.
111 South Walnut Street
Greenville, MS 38701

GS#323-024 ARPA INFR. - WASTE CENT. TREATMENT
SOUTH MISSISSIPPI CORRECTIONAL INSTITUTION
LEAKESVILLE, MISSISSIPPI

Burle Proj. No.:	08194-1-0122
File Name:	PLAN AND PROFILES.dwg
Date:	04/29/2024
Scale:	AS SHOWN
Drawn by:	MJJ/JRG
Checked:	DTM
Revisions:	
Revisions:	
Revisions:	

PLAN & PROFILE - COARSE SCREEN TO INFLUENT PUMP STATION

C-213
Drawing Number

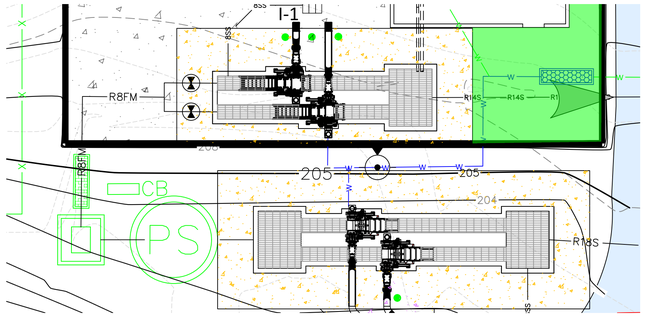

PLAN VIEW
VALVE BOX TO FINE SCREEN
SCALE: 1"=10'

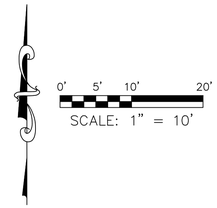

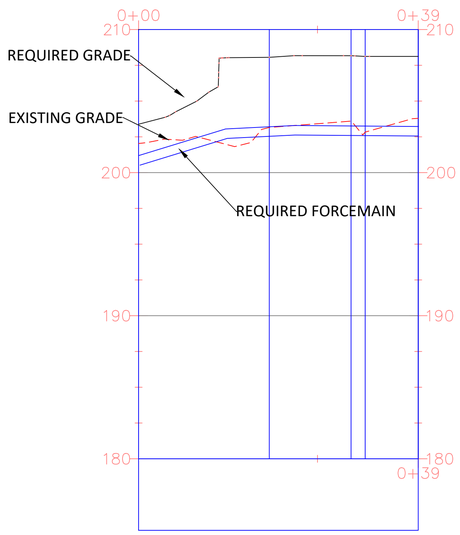

PROFILE VIEW
VALVE BOX TO FINE SCREEN
SCALE: 1"=10'H/1"=5'V

LEGEND:

- 200 — EXISTING MAJOR CONTOURS (FEET)
- 201 — EXISTING MINOR CONTOURS (FEET)
- 200 — REQUIRED MAJOR CONTOURS (FEET)
- 201 — REQUIRED MINOR CONTOURS (FEET)
- REQUIRED 8 INCH STORM SEWER PIPE (SEE DETAIL DRAWING C-907)
- R8FM — REQUIRED 8" FORCE MAIN
- R12S — REQUIRED 12" GRAVITY SEWER LINE
- R14S — REQUIRED 14" GRAVITY SEWER LINE
- W — REQUIRED WATER LINE
- 8SS — REQUIRED 8" STORM SEWER WATER LINE
- PS — REQUIRED INFLUENT PUMP STATION (SEE DETAIL DRAWING C-310)
- REQUIRED MECHANICAL FINE SCREEN (SEE DRAWING C-305)
- REQUIRED MECHANICAL COARSE SCREEN (SEE DRAWING C-302)
- REQUIRED IN-LINE FLOW METER (SEE DRAWING C-901)
- REQUIRED BACK FLOW PREVENTOR (SEE DRAWING C-903)
- I-2 — REQUIRED SURFACE INLET (SEE DETAIL DRAWING C-907)
- REQUIRED PINCH VALVE (SEE DETAIL DRAWING C-901)
- REQUIRED BOLLARD (SEE DRAWING C-904)
- EXISTING ASPHALT PAVEMENT
- REQUIRED 4" CONCRETE (SEE DRAWING C-904)
- REQUIRED 8" CONCRETE (SEE DRAWING C-904)
- REQUIRED HYDRANT (SEE DRAWING C-903)
- FLOW DIRECTION
- I-3 — REQUIRED SURFACE INLET (SEE DETAIL DRAWING C-907) (SEE TABLE DRAWING C-204)

W.L. BURLE
ENGINEERS, P.A.
111 South Walnut Street
Greenville, MS 38701

THOMAS MARTIN DUNN
LICENSED
PROFESSIONAL
ENGINEER
No. 18946
STATE OF MISSISSIPPI
2024-04-29

GS#323-024 ARPA INFR. - WASTE CENT. TREATMENT
SOUTH MISSISSIPPI CORRECTIONAL INSTITUTION
LEAKESVILLE, MISSISSIPPI

Burle Proj. No.:	08194-1-0122
File Name:	PLAN AND PROFILES.dwg
Date:	04/29/2024
Scale:	AS SHOWN
Drawn by:	MJJ/JRG
Checked:	DTM
Revisions:	
Revisions:	
Revisions:	

PLAN & PROFILE - VALVE BOX TO FINE SCREEN

C-214
Drawing Number

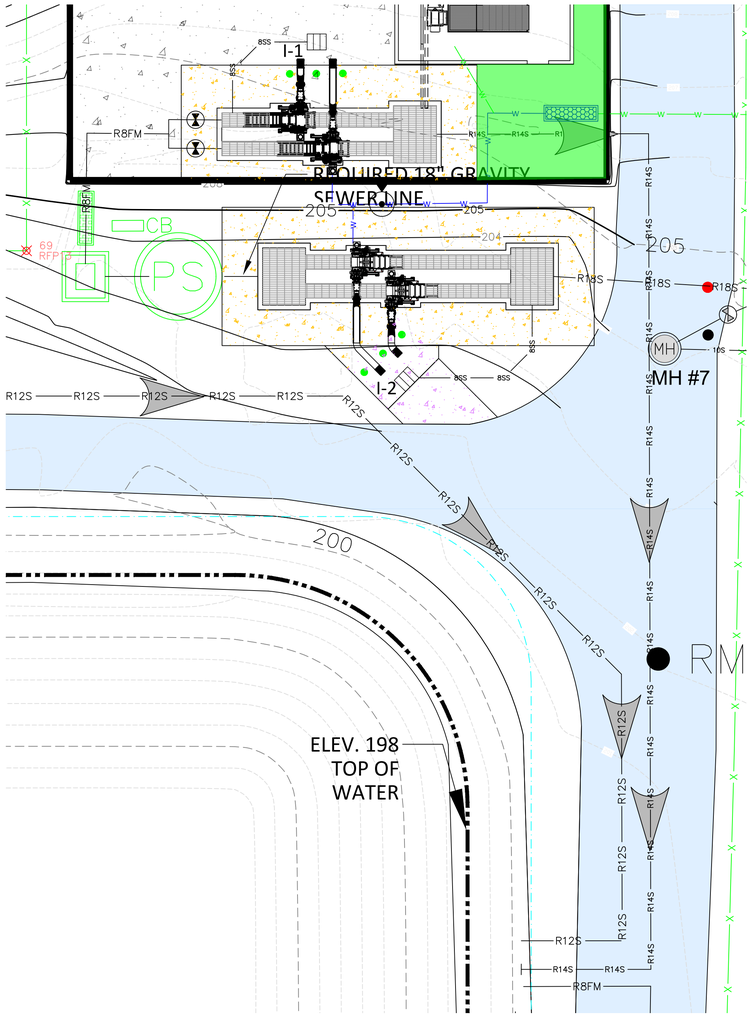

PLAN VIEW
FINE SCREEN TO EAST LAGOON
SCALE: 1"=10'

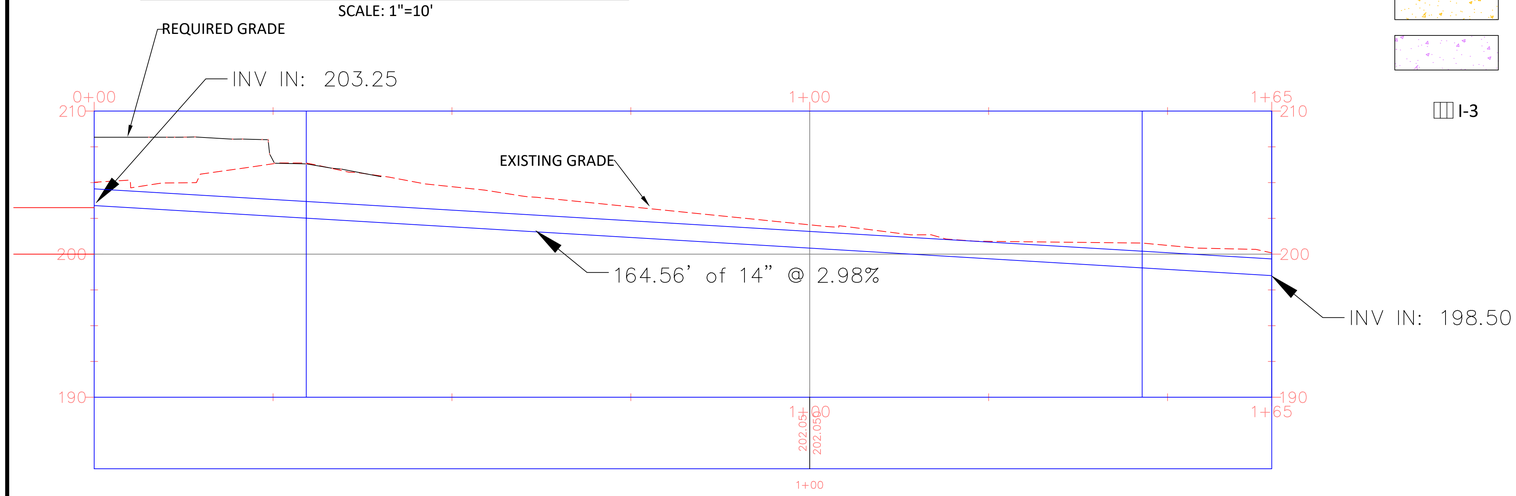

PROFILE VIEW
FINE SCREEN TO EAST LAGOON
SCALE: 1"=10'H/1"=5'V

0' 5' 10' 20'
SCALE: 1" = 10'

LEGEND:

- 200 — EXISTING MAJOR CONTOURS (FEET)
- 201 — EXISTING MINOR CONTOURS (FEET)
- 200 — REQUIRED MAJOR CONTOURS (FEET)
- 201 — REQUIRED MINOR CONTOURS (FEET)
- EXISTING TOP BANK OF DITCH
- EXISTING TOE EDGE OF DITCH
- EXISTING CENTERLINE OF DITCH
- R12S — REQUIRED 12" GRAVITY SEWER LINE
- R14S — REQUIRED 14" GRAVITY SEWER LINE
- R8FM — REQUIRED 8" FORCE MAIN
- 8SS — REQUIRED 8 INCH STORM SEWER PIPE (SEE DETAIL DRAWING C-907)
- FLOW DIRECTION
- REQUIRED MECHANICAL FINE SCREEN (SEE DRAWING C-305)
- REQUIRED MECHANICAL COARSE SCREEN (SEE DRAWING C-302)
- PS — REQUIRED INFLUENT PUMP STATION (SEE DRAWING C-310)
- REQUIRED IN-LINE FLOWMETER (SEE DRAWING C-901)
- REQUIRED BACK FLOW PREVENTOR (SEE DRAWING C-903)
- CB — REQUIRED CONTROL BOX (SEE DETAIL DRAWING E-310)
- REQUIRED 4" CONCRETE (SEE DETAIL DRAWING C-904)
- REQUIRED 8" CONCRETE (SEE DETAIL DRAWING C-904)
- I-3 — REQUIRED SURFACE INLET (SEE DETAIL DRAWING C-907) (SEE TABLE DRAWING C-204)

W.L. BURLE
ENGINEERS, P.A.
111 South Walnut Street
Greenville, MS 38701

GS#323-024 ARPA INFR. - WASTE CENT. TREATMENT
SOUTH MISSISSIPPI CORRECTIONAL INSTITUTION
LEAKESVILLE, MISSISSIPPI

Burle Proj. No.:	08194-1-0122
File Name:	PLAN AND PROFILES.dwg
Date:	04/29/2024
Scale:	AS SHOWN
Drawn by:	MJJ/JRG
Checked:	DTM
Revisions:	
Revisions:	
Revisions:	

PLAN & PROFILE -
FINE SCREEN
TO EAST LAGOON

C-215
Drawing Number

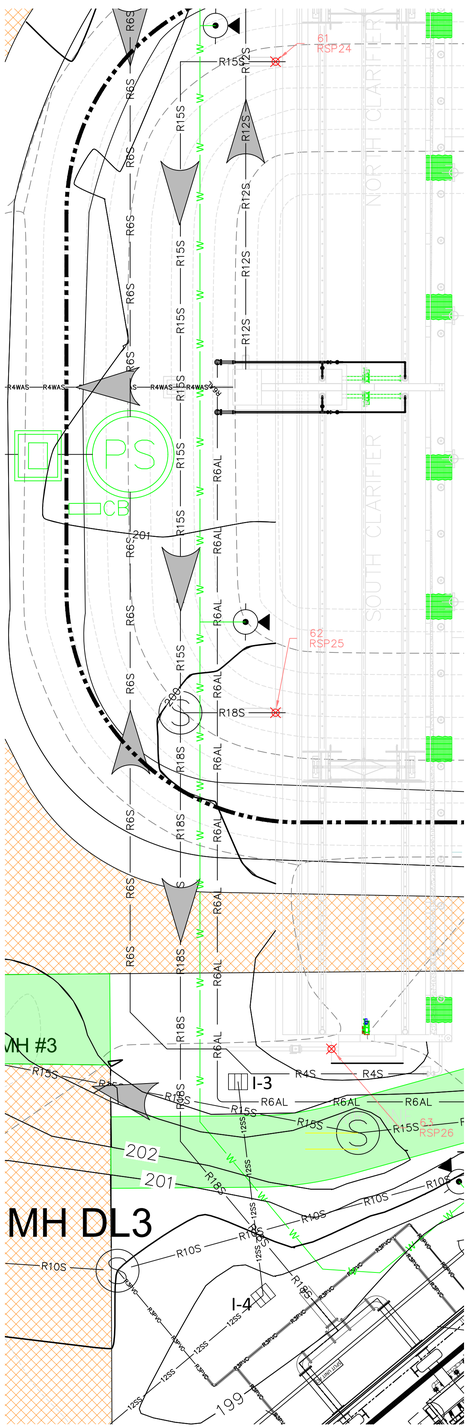

PLAN VIEW
NORTH CLARIFIER TO FILTER
SCALE: 1"=10'

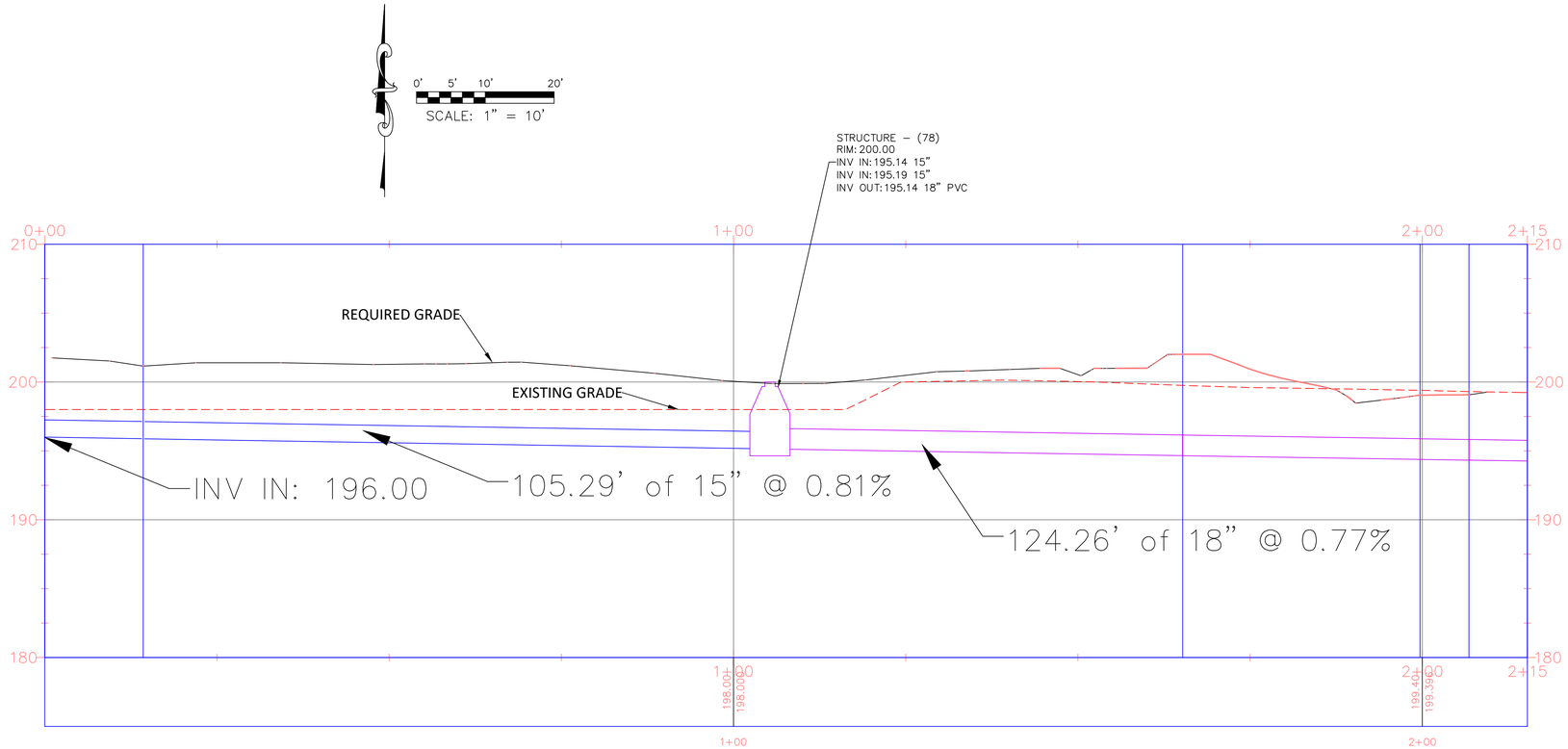

PROFILE VIEW
NORTH CLARIFIER TO FILTER
SCALE: 1"=10'H/1"=5'V

STRUCTURE TABLE				
STRUCTURE NAME:	INVERTS:	RIM ELEVATION	NORTHING	EASTING
RS1	INV OUT = 200.45	201.53	609076.6424	1054119.0189
RS2	INV IN = 200.09 INV OUT = 200.09	201.17	609163.4112	1054119.0189
RS3	INV IN = 200.04 INV OUT = 200.04	201.12	609171.1994	1054126.8071
RS4	INV IN = 199.26 INV OUT = 199.26	200.34	609171.1994	1054312.8689
RS5	INV IN = 199.17 INV OUT = 199.17	200.25	609155.9841	1054328.0841
RS6	INV IN = 198.97 INV OUT = 198.97	200.05	609155.9841	1054376.5691
RS7	INV IN = 198.74 INV OUT = 198.74	199.82	609117.1093	1054415.4439
RS8	INV IN = 198.58 INV OUT = 198.58	199.66	609079.8459	1054415.5490
RS9		0.00	609079.8459	1054401.4455

Pipe Table				
NAME	SIZE	LENGTH	SLOPE	MATERIAL
RS1 TO RS2	12"	86.77'	0.42%	PVC
RS3 TO RS4	12"	186.06'	0.42%	PVC
RS4 TO RS5	12"	21.52'	0.42%	PVC
RS5 TO RS6	12"	48.48'	0.42%	PVC
RS6 TO RS7	12"	54.98'	0.42%	PVC
RS7 TO RS8	12"	37.26'	0.42%	PVC
RS8 TO RS9	12"	14.10'	0.42%	PVC

LEGEND:

- 200 — EXISTING MAJOR CONTOURS (FEET)
- 201 — EXISTING MINOR CONTOURS (FEET)
- 200 — REQUIRED MAJOR CONTOURS (FEET)
- 201 — REQUIRED MINOR CONTOURS (FEET)
- EXISTING TOP BANK OF DITCH
- EXISTING TOE EDGE OF DITCH
- EXISTING CENTERLINE OF DITCH
- R8FM — REQUIRED 8" FORCE MAIN (SEE DETAIL DRAWING C–902)
- R4WAS — REQUIRED 4" WAS LINE (SEE DETAIL DRAWING C–902)
- 8S — REQUIRED 8" GRAVITY SEWER LINE (SEE DETAIL DRAWING C–902)
- R10S — REQUIRED 10" GRAVITY SEWER LINE (SEE DETAIL DRAWING C–902)
- R12S — REQUIRED 12" GRAVITY SEWER LINE (SEE DETAIL DRAWING C–902)
- R12S — REQUIRED 12" STORM SEWER PIPE (SEE DETAIL DRAWING C–907)
- R18S — REQUIRED 18" GRAVITY SEWER LINE (SEE DETAIL DRAWING C–902)
- RDGL — REQUIRED GRAVITY DECANT LINE (SEE DETAIL DRAWING C–902)
- W — REQUIRED WATER LINE (SEE DETAIL DRAWING C–903)
- R14AL — REQUIRED 14" AIR LINE (SEE DETAIL DRAWING C–902)
- R6AL — REQUIRED 6" AIR LINE (SEE DETAIL DRAWING C–902)
- PS — REQUIRED SCUM PUMPING STATION (SEE DETAIL DRAWING C–804)
- I-3 — REQUIRED SURFACE INLET (SEE DETAIL DRAWING C–907) (SEE TABLE DRAWING C–204)

W.L. BURLE
ENGINEERS, P.A.
111 South Walnut Street
Greenville, MS 38701

GS#323-024 ARPA INFR. - WASTE CENT. TREATMENT
SOUTH MISSISSIPPI CORRECTIONAL INSTITUTION
LEAKESVILLE, MISSISSIPPI

Burle Proj. No.: 08194-1-0122
File Name: PLAN AND PROFILES.dwg
Date: 04/29/2024
Scale: AS SHOWN
Drawn by: MJJ/JRG
Checked: DTM
Revisions:
Revisions:
Revisions:

PLAN & PROFILE - NORTH CLARIFIER TO FILTER

C-216
Drawing Number

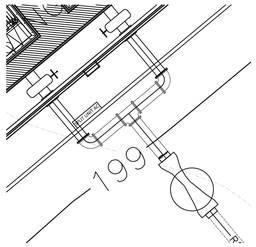

PLAN VIEW
FILTER TO PARSHALL FLUME
SCALE: 1"=10'

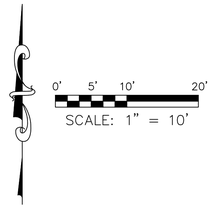

LEGEND:

- 200 — EXISTING MAJOR CONTOURS (FEET)
- 201 — EXISTING MINOR CONTOURS (FEET)
- 200 — REQUIRED MAJOR CONTOURS (FEET)
- 201 — REQUIRED MINOR CONTOURS (FEET)
- R18S — REQUIRED 18" GRAVITY SEWER LINE (SEE DETAIL DRAWING C-902)
- FLOW DIRECTION
- REQUIRED PARSHALL FLUME (SEE DRAWING C-601)

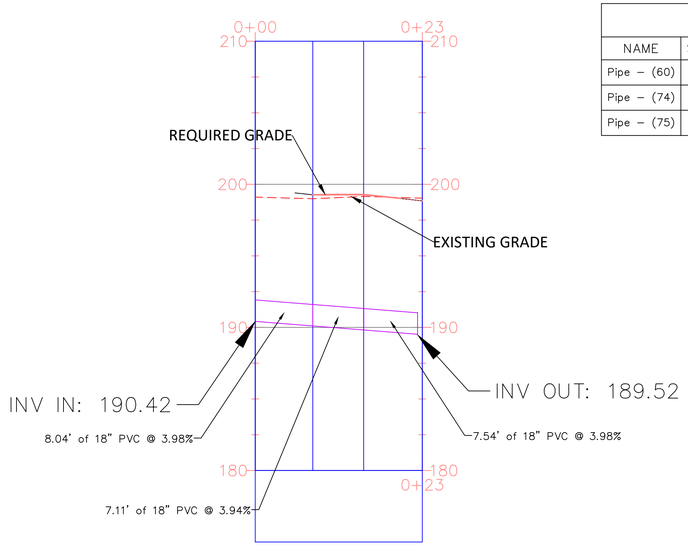

PROFILE VIEW
FILTER TO PARSHALL FLUME
SCALE: 1"=10'H/1"=5'V

Pipe Table				
NAME	SIZE	LENGTH	SLOPE	MATERIAL
Pipe – (60)	18"	7.54'	3.98%	PVC
Pipe – (74)	18"	8.04'	3.98%	PVC
Pipe – (75)	18"	7.11'	3.94%	PVC

W.L. BURLE
ENGINEERS, P.A.
111 South Walnut Street
Greenville, MS 38701

GS#323-024 ARPA INFR. - WASTE CENT. TREATMENT
SOUTH MISSISSIPPI CORRECTIONAL INSTITUTION
LEAKESVILLE, MISSISSIPPI

Burle Proj. No.: 08194-1-0122
File Name: PLAN AND PROFILES.dwg
Date: 04/29/2024
Scale: AS SHOWN
Drawn by: MJJ/JRG
Checked: DTM
Revisions:
Revisions:
Revisions:

PLAN & PROFILE - FILTER TO PARSHALL FLUME

C-217
Drawing Number

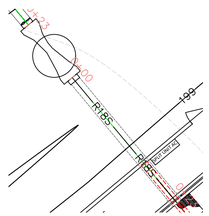

PLAN VIEW
PARSHALL FLUME TO DISINFECTION SYSTEM
SCALE: 1"=10'

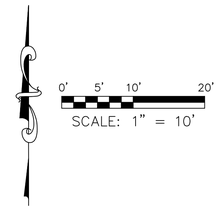

LEGEND:

200	EXISTING MAJOR CONTOURS (FEET)
201	EXISTING MINOR CONTOURS (FEET)
200	REQUIRED MAJOR CONTOURS (FEET)
201	REQUIRED MINOR CONTOURS (FEET)
R18S R18S R18S	REQUIRED 18" GRAVITY SEWER LINE (SEE DETAIL DRAWING C–902)
	FLOW DIRECTION
	REQUIRED PARSHALL FLUME (SEE DRAWING C–601)

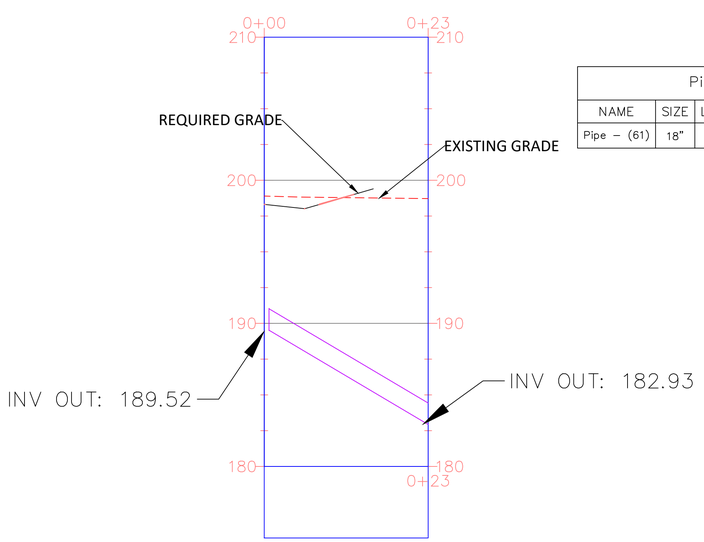

Pipe Table

NAME	SIZE	LENGTH	SLOPE	MATERIAL
Pipe – (61)	18"	22.24'	29.63%	PVC

PROFILE VIEW
PARSHALL FLUME TO DISINFECTION SYSTEM
SCALE: 1"=10'H/1"=5'V

W. L. BURLE
ENGINEERS, P.A.
111 South Walnut Street
Greenville, MS 38701

GS#323-024 ARPA INFR. - WASTE CENT. TREATMENT
SOUTH MISSISSIPPI CORRECTIONAL INSTITUTION
LEAKESVILLE, MISSISSIPPI

Burle Proj. No.: 08194-1-0122
File Name: PLAN AND PROFILES.dwg
Date: 04/29/2024
Scale: AS SHOWN
Drawn by: MJJ/JRG
Checked: DTM
Revisions:
Revisions:
Revisions:

PLAN & PROFILE - PARSHALL FLUME TO DISINFECTION SYSTEM

C-218
Drawing Number

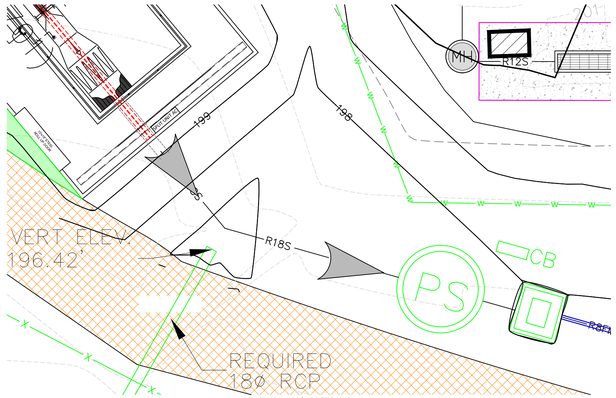

PLAN VIEW
DISINFECTION SYSTEM TO EFFLUENT PUMP STATION
SCALE: 1"=10'

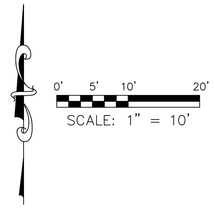

LEGEND:

- 200 — EXISTING MAJOR CONTOURS (FEET)
- 201 — EXISTING MINOR CONTOURS (FEET)
- 200 — REQUIRED MAJOR CONTOURS (FEET)
- 201 — REQUIRED MINOR CONTOURS (FEET)
- R18S — R18S — R18S — REQUIRED 18" GRAVITY SEWER LINE (SEE DETAIL DRAWING C-902)
- FLOW DIRECTION
- EXISTING GRAVEL AREA
- PS — REQUIRED EFFLUENT PUMP STATION (SEE DRAWING C-802)

Pipe Table				
NAME	SIZE	LENGTH	SLOPE	MATERIAL
Pipe – (62)	18"	22.40'	0.27%	PVC
Pipe – (63)	18"	25.19'	0.27%	PVC

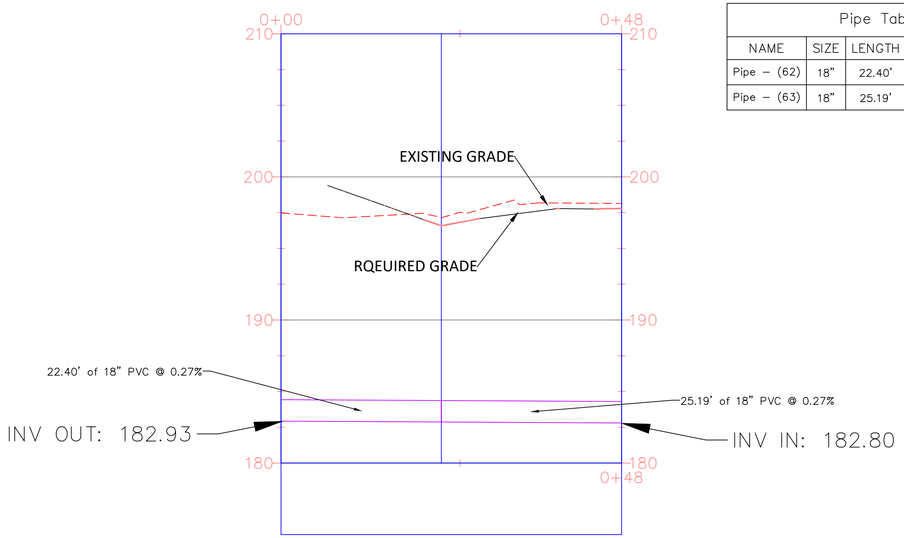

PROFILE VIEW
DISINFECTION SYSTEM TO EFFLUENT PUMP STATION
SCALE: 1"=10'H/1"=5'V

W.L. BURLE
ENGINEERS, P.A.
111 South Walnut Street
Greenville, MS 38701

GS#323-024 ARPA INFR. - WASTE CENT. TREATMENT
SOUTH MISSISSIPPI CORRECTIONAL INSTITUTION
LEAKESVILLE, MISSISSIPPI

Burle Proj. No.: 08194-1-0122
File Name: PLAN AND PROFILES.dwg
Date: 04/29/2024
Scale: AS SHOWN
Drawn by: MJJ/JRG
Checked: DTM
Revisions:
Revisions:
Revisions:

PLAN & PROFILE - DISINFECTION SYSTEM TO EFFLUENT PUMP STATION

C-219
Drawing Number

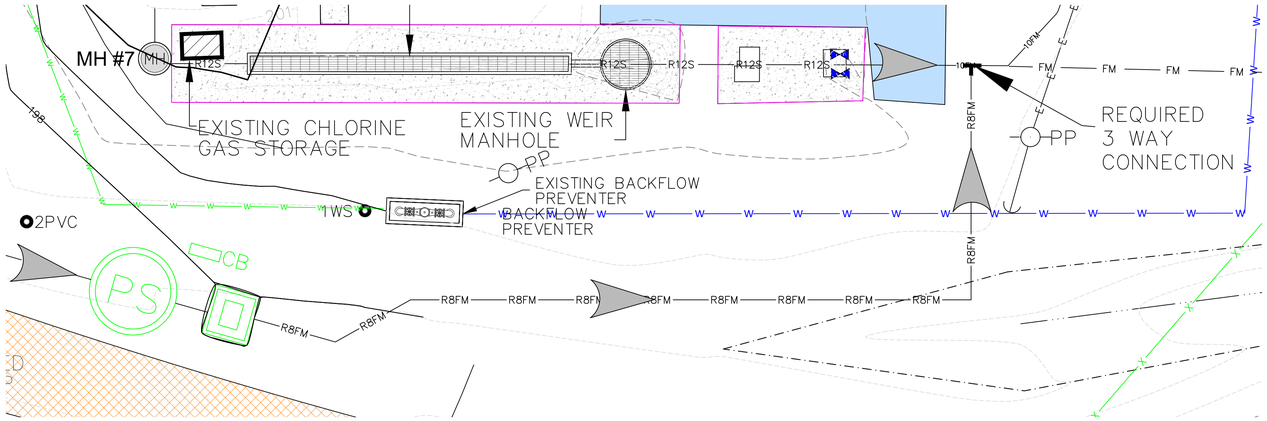

PLAN VIEW
EFFLUENT PUMP STATION TO EXISTING FORCE MAIN
SCALE: 1"=10'

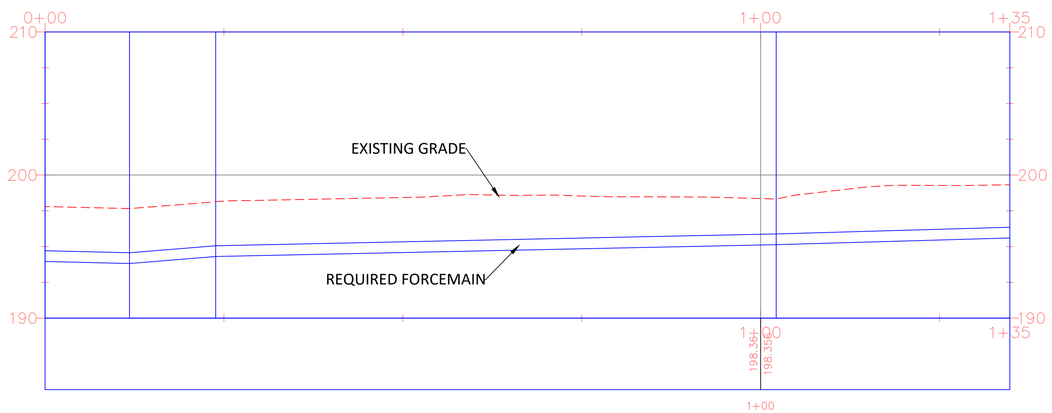

PROFILE VIEW
EFFLUENT PUMP STATION TO EXISTING FORCE MAIN
SCALE: 1"=10'H/1"=5'V

0' 5' 10' 20'
SCALE: 1" = 10'

LEGEND:

200	EXISTING MAJOR CONTOURS (FEET)
201	EXISTING MINOR CONTOURS (FEET)
200	REQUIRED MAJOR CONTOURS (FEET)
201	REQUIRED MINOR CONTOURS (FEET)
R18S	REQUIRED 18" GRAVITY SEWER LINE (SEE DETAIL DRAWING C-902)
	FLOW DIRECTION
	EXISTING GRAVEL AREA
	EXISTING ASPHALT PAVEMENT
2PVC	EXISTING 2" PVC/SPIGOT
PP	EXISTING POWER POLE
	EXISTING GUY WIRE
E	EXISTING OVERHEAD ELECTRIC POWER
10FM	EXISTING 10" SANITARY FORCEMAIN
1WS	EXISTING 1 INCH WATER SPIGOT
2PVC	EXISTING 2 INCH PVC/SPIGOT
	EXISTING TOP BANK OF DITCH
	EXISTING TOE EDGE OF DITCH
	EXISTING CENTERLINE OF DITCH
W	EXISTING WATER LINE
W	REQUIRED WATER LINE (SEE DETAIL DRAWING C-903)
PS	REQUIRED EFFLUENT PUMP STATION (SEE DETAIL DRAWING C-802)
CB	REQUIRED CONTROL BOX (SEE DETAIL DRAWING C-802)

W. L. BURLE
ENGINEERS, P.A.
111 South Walnut Street
Greenville, MS 38701

GS#323-024 ARPA INFR. - WASTE CENT. TREATMENT
SOUTH MISSISSIPPI CORRECTIONAL INSTITUTION
LEAKESVILLE, MISSISSIPPI

Burle Proj. No.: 08194-1-0122
File Name: PLAN AND PROFILES.dwg
Date: 04/29/2024
Scale: AS SHOWN
Drawn by: MJJ/JRG
Checked: DTM
Revisions:
Revisions:
Revisions:

PLAN & PROFILE - EFFLUENT PUMP STATION TO EXISTINNG FORCE MAIN

C-220
Drawing Number

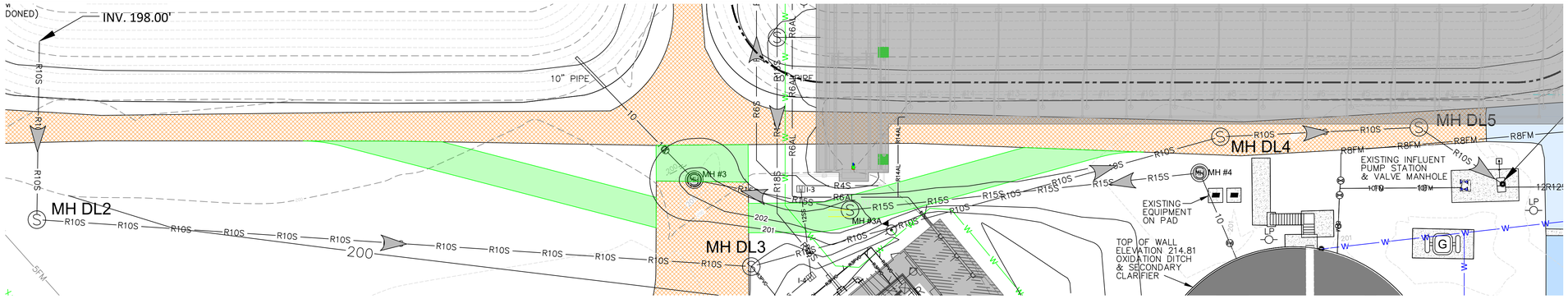

PLAN VIEW
WEST LAGOON TO EXISTING INFLUENT PUMP STATION
SCALE: 1"=20'

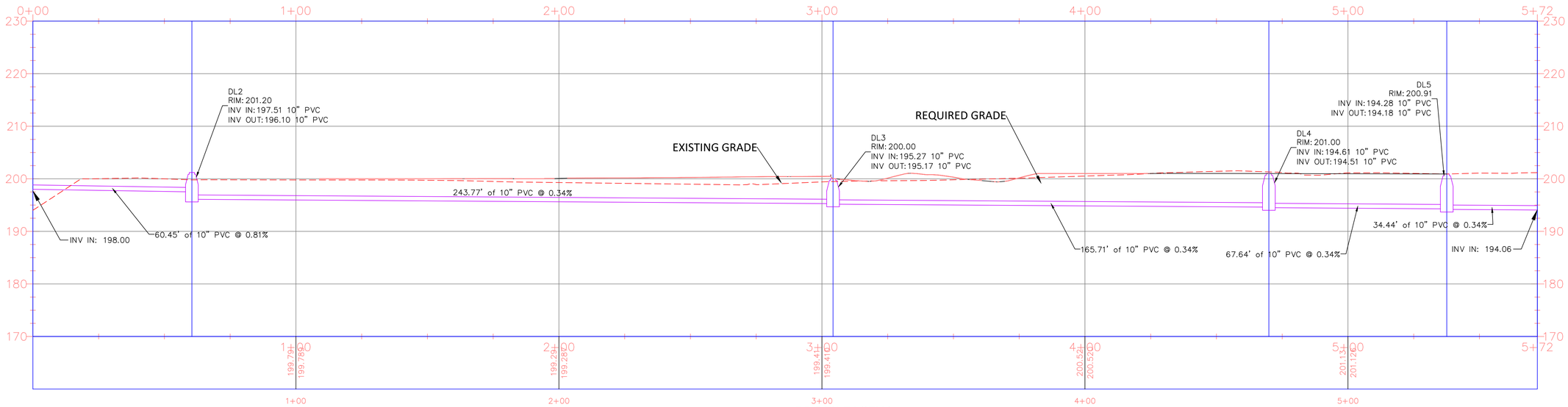

PROFILE VIEW
WEST LAGOON TO PROCESS LIFT STATION
SCALE: 1"=10'H/1"=5'V

STRUCTURE TABLE				
STRUCTURE NAME:	INVERTS:	RIM ELEVATION	NORTHING	EASTING
DL1	INV OUT = 198.00	199.36	609027.0471	1053858.7199
DL2	INV IN = 197.51 INV OUT = 196.10	201.20	608966.6002	1053857.8558
DL3	INV IN = 195.27 INV OUT = 195.17	200.00	608950.6405	1054101.1048
DL4	INV IN = 194.61 INV OUT = 194.51	201.00	608994.7985	1054260.8207
DL5	INV IN = 194.28 INV OUT = 194.18	200.91	608998.0168	1054328.3842

Pipe Table				
NAME	SIZE	LENGTH	SLOPE	MATERIAL
DL1 TO DL2	10"	60.45'	0.81%	PVC
DL2 TO DL3	10"	243.77'	0.34%	PVC
DL3 TO DL4	10"	165.71'	0.34%	PVC
DL4 TO DL5	10"	67.64'	0.34%	PVC
DL5 TO DL6	10"	34.44'	0.34%	PVC

LEGEND:

- 200 — EXISTING MAJOR CONTOURS (FEET)
- 201 — EXISTING MINOR CONTOURS (FEET)
- 200 — REQUIRED MAJOR CONTOURS (FEET)
- 201 — REQUIRED MINOR CONTOURS (FEET)
- FLOW DIRECTION
- EXISTING GRAVEL AREA
- EXISTING ASPHALT PAVEMENT
- PP — EXISTING POWER POLE
- EXISTING GUY WIRE
- E — EXISTING OVERHEAD ELECTRIC POWER
- 10FM — EXISTING 10" SANITARY FORCEMAIN
- 1WS — EXISTING 1 INCH WATER SPIGOT
- 2PVC — EXISTING 2 INCH PVC/SPIGOT
- EXISTING TOP BANK OF DITCH
- EXISTING TOE EDGE OF DITCH
- EXISTING CENTERLINE OF DITCH
- W — EXISTING WATER LINE
- W — REQUIRED WATER LINE (SEE DETAIL DRAWING C-903)
- R8S — REQUIRED 8" GRAVITY SEWER LINE (SEE DETAIL DRAWING C-902)
- R10S — REQUIRED 10" GRAVITY SEWER LINE (SEE DETAIL DRAWING C-902)
- R12S — REQUIRED 12" GRAVITY SEWER LINE (SEE DETAIL DRAWING C-902)
- R18S — REQUIRED 18" GRAVITY SEWER LINE (SEE DETAIL DRAWING C-902)
- RDGL — REQUIRED GRAVITY DECANT LINE (SEE DETAIL DRAWING C-902)
- R4WAS — REQUIRED 4" WAS LINE (SEE DETAIL DRAWING C-902)
- W — REQUIRED WATER LINE (SEE DETAIL DRAWING C-903)
- 12SS — REQUIRED 12 INCH STORM SEWER PIPE (SEE DETAIL DRAWING C-907)
- 5FM — EXISTING FORCEMAIN TO BE ABAANDONED
- 10FM — EXISTING 10" SANITARY FORCE MAIN
- MH #1 — EXISTING MANHOLE
- REQUIRED PINCH VALVE (SEE DETAIL DRAWING C-901)
- I-3 — REQUIRED SURFACE INLET (SEE DETAIL DRAWING C-907) (SEE TABLE DRAWING C-204)

W. L. BURLE
ENGINEERS, P.A.
111 South Walnut Street
Greenville, MS 38701

GS#323-024 ARPA INFR. - WASTE CENT. TREATMENT
SOUTH MISSISSIPPI CORRECTIONAL INSTITUTION
LEAKESVILLE, MISSISSIPPI

Burle Proj. No.: 08194-1-0122
File Name: PLAN AND PROFILES.dwg
Date: 04/29/2024
Scale: AS SHOWN
Drawn by: MJJ/JRG
Checked: DTM
Revisions:
Revisions:
Revisions:

PLAN & PROFILE - WEST LAGOON TO EXISTING INFLUENT PUMP STATION

C-221
Drawing Number

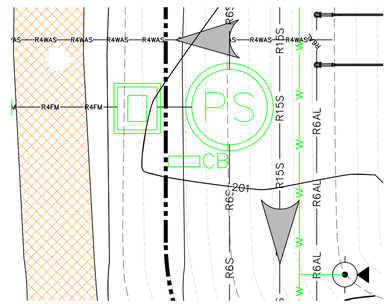

PLAN VIEW
SCUM PUMP STATION TO WEST LAGOON
SCALE: 1"=10'

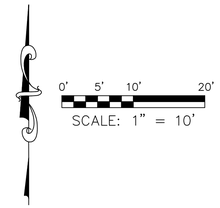

LEGEND:

200	EXISTING MAJOR CONTOURS (FEET)
201	EXISTING MINOR CONTOURS (FEET)
200	REQUIRED MAJOR CONTOURS (FEET)
201	REQUIRED MINOR CONTOURS (FEET)
	FLOW DIRECTION
	EXISTING GRAVEL AREA
W	REQUIRED WATER LINE (SEE DETAIL DRAWING C-903)
R4WAS	REQUIRED 4" WAS LINE (SEE DETAIL DRAWING C-902)
R6S	REQUIRED 6" GRAVITY SEWER LINE (SEE DETAIL DRAWING C-902)
R15S	REQUIRED 15" GRAVITY SEWER LINE (SEE DETAIL DRAWING C-902)
R6AL	REQUIRED 6" AIR LINE (SEE DETAIL DRAWING C-902)
PS	REQUIRED SCUM PUMPING STATION (SEE DETAIL DRAWING C-804)

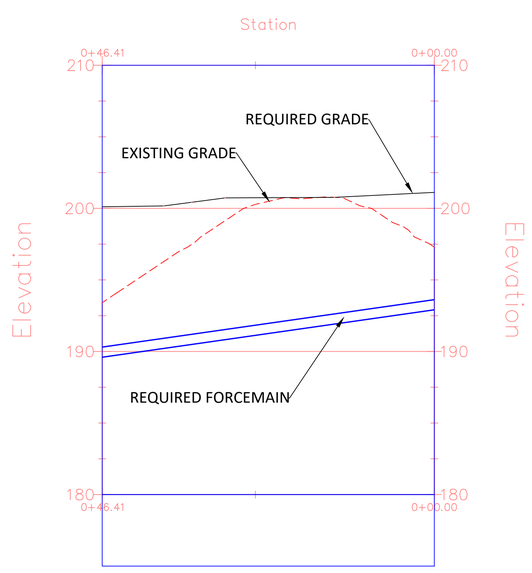

PROFILE VIEW
SCUM PUMP STATION TO WEST LAGOON
SCALE: 1"=10'H/1"=5'V

W.L. BURLE
ENGINEERS, P.A.
111 South Walnut Street
Greenville, MS 38701

THOMAS MASTER
No. 18946
STATE OF MISSISSIPPI
2024-04-24

GS#323-024 ARPA INFR. - WASTE CENT. TREATMENT
SOUTH MISSISSIPPI CORRECTIONAL INSTITUTION
LEAKESVILLE, MISSISSIPPI

Burle Proj. No.: 08194-1-0122
File Name: PLAN AND PROFILES.dwg
Date: 04/29/2024
Scale: AS SHOWN
Drawn by: MJJ/JRG
Checked: DTM
Revisions:
Revisions:
Revisions:

PLAN & PROFILE - SCUM PUMP STATION TO WEST LAGOON

C-222
Drawing Number

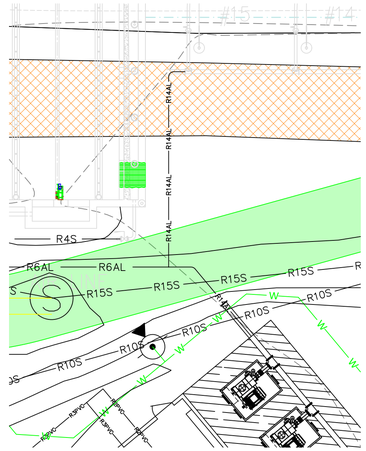

PLAN VIEW
AIR BLOWERS TO EAST LAGOON
SCALE: 1"=10'

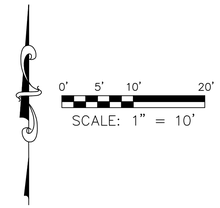

LEGEND:

200	EXISTING MAJOR CONTOURS (FEET)
201	EXISTING MINOR CONTOURS (FEET)
200	REQUIRED MAJOR CONTOURS (FEET)
201	REQUIRED MINOR CONTOURS (FEET)
R14AL	REQUIRED 14" AIR LINE (SEE DETAIL DRAWING C-902)
R6AL	REQUIRED 6" AIR LINE (SEE DETAIL DRAWING C-902)
R4S	REQUIRED 4" GRAVITY SEWER LINE (SEE DETAIL DRAWING C-902)
R10S	REQUIRED 10" GRAVITY SEWER LINE (SEE DETAIL DRAWING C-902)
R15S	REQUIRED 15" GRAVITY SEWER LINE (SEE DETAIL DRAWING C-902)
W	REQUIRED WATER LINE (SEE DETAIL DRAWING C-903)
R3PVC	REQUIRED 3" PVC (SEE DETAIL DRAWING C-902)
R2PVC	REQUIRED 2" PVC (SEE DETAIL DRAWING C-902)
	REQUIRED GRAVEL (SEE DETAIL DRAWING C-904)
	EXISTING GRAVELED AREA

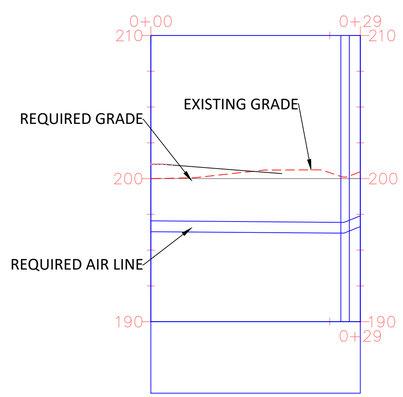

PROFILE VIEW
AIR BLOWERS TO EAST LAGOON
SCALE: 1"=10'H/1"=5'V

W. L. BURLE
ENGINEERS, P.A.
111 South Walnut Street
Greenville, MS 38701

GS#323-024 ARPA INFR. - WASTE
CENT. TREATMENT
SOUTH MISSISSIPPI CORRECTIONAL INSTITUTION
LEAKESVILLE, MISSISSIPPI

Burle Proj. No.: 08194-1-0122
File Name: PLAN AND PROFILES.dwg
Date: 04/29/2024
Scale: AS SHOWN
Drawn by: MJJ/JRG
Checked: DTM
Revisions:
Revisions:
Revisions:

PLAN & PROFILE - AIR BLOWERS TO EAST LAGOON

C-223
Drawing Number

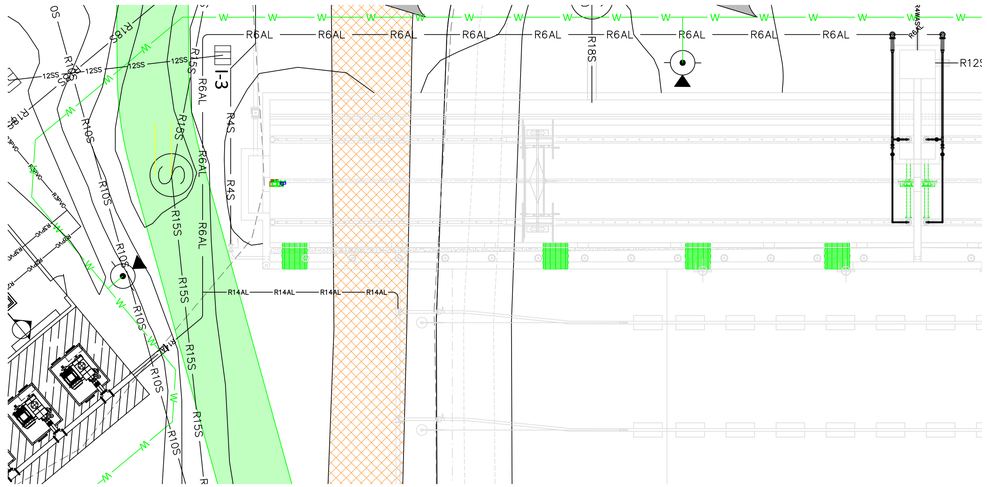

PLAN VIEW
AIR BLOWERS TO CLARIFIER
SCALE: 1"=10'

0' 5' 10' 20'
SCALE: 1" = 10'

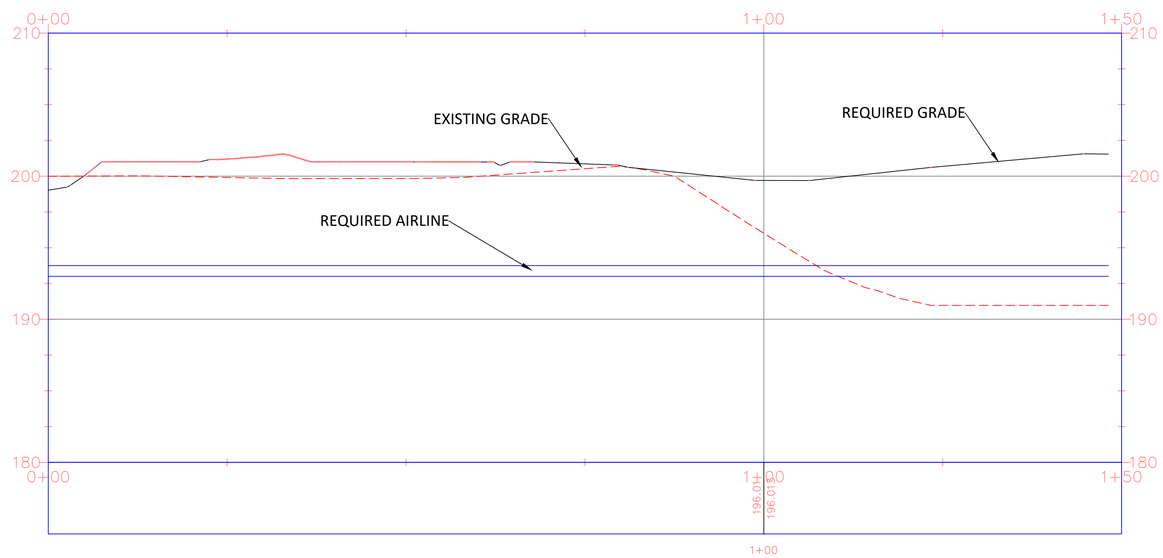

PROFILE VIEW
AIR BLOWERS TO CLARIFIER
SCALE: 1"=10'H/1"=5'V

LEGEND:

200	EXISTING MAJOR CONTOURS (FEET)
201	EXISTING MINOR CONTOURS (FEET)
200	REQUIRED MAJOR CONTOURS (FEET)
201	REQUIRED MINOR CONTOURS (FEET)
R14AL	REQUIRED 14" AIR LINE (SEE DETAIL DRAWING C-902)
R6AL	REQUIRED 6" AIR LINE (SEE DETAIL DRAWING C-902)
R4S	REQUIRED 4" GRAVITY SEWER LINE (SEE DETAIL DRAWING C-902)
R10S	REQUIRED 10" GRAVITY SEWER LINE (SEE DETAIL DRAWING C-902)
R15S	REQUIRED 15" GRAVITY SEWER LINE (SEE DETAIL DRAWING C-902)
R18S	REQUIRED 18" GRAVITY SEWER LINE (SEE DETAIL DRAWING C-902)
W	REQUIRED WATER LINE (SEE DETAIL DRAWING C-903)
R3PVC	REQUIRED 3" PVC (SEE DETAIL DRAWING C-902)
R2PVC	REQUIRED 2" PVC (SEE DETAIL DRAWING C-902)
12SS	REQUIRED 12 INCH STORM SEWER PIPE (SEE DETAIL DRAWING C-907)
	REQUIRED GRAVEL (SEE DETAIL DRAWING C-904)
	EXISTING GRAVELED AREA
	REQUIRED HYDRANT (SEE DETAIL DRAWING C-903)
I-3	REQUIRED SURFACE INLET (SEE DETAIL DRAWING C-907) (SEE TABLE DRAWING C-204)

W.L. BURLE
ENGINEERS, P.A.
111 South Walnut Street
Greenville, MS 38701

THOMAS MASTER
LICENSED
PROFESSIONAL ENGINEER
No. 18194
STATE OF MISSISSIPPI
2024-04-29

GS#323-024 ARPA INFR. - WASTE CENT. TREATMENT
SOUTH MISSISSIPPI CORRECTIONAL INSTITUTION
LEAKESVILLE, MISSISSIPPI

Burle Proj. No.:	08194-1-0122
File Name:	PLAN AND PROFILES.dwg
Date:	04/29/2024
Scale:	AS SHOWN
Drawn by:	MJJ/JRG
Checked:	DTM
Revisions:	
Revisions:	
Revisions:	

PLAN & PROFILE - AIR BLOWERS TO CLARIFIERS

C-224
Drawing Number

0' 5' 10' 20'
SCALE: 1" = 10'

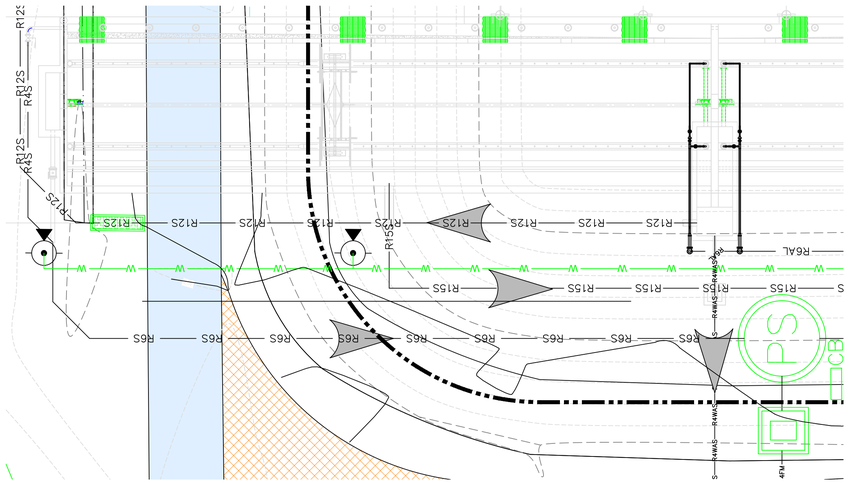

PLAN VIEW
NORTH CLARIFIER TO SCUMP PUMP
SCALE: 1"=10'

LEGEND:

200	EXISTING MAJOR CONTOURS (FEET)
201	EXISTING MINOR CONTOURS (FEET)
200	REQUIRED MAJOR CONTOURS (FEET)
201	REQUIRED MINOR CONTOURS (FEET)
R4WAS	REQUIRED 4" WAS LINE (SEE DETAIL DRAWING C-902)
R6S	REQUIRED 6" GRAVITY SEWER LINE (SEE DETAIL DRAWING C-902)
R6AL	REQUIRED 6" AIR LINE (SEE DETAIL DRAWING C-902)
R12S	REQUIRED 12" GRAVITY SEWER LINE (SEE DETAIL DRAWING C-902)
R15S	REQUIRED 15" GRAVITY SEWER LINE (SEE DETAIL DRAWING C-902)
W	REQUIRED WATER LINE (SEE DETAIL DRAWING C-903)
	REQUIRED GRAVEL (SEE DETAIL DRAWING C-904)
	EXISTING GRAVELED AREA
PS	REQUIRED SCUM PUMPING STATION (SEE DETAIL DRAWING C-804)
	REQUIRED HYDRANT (SEE DETAIL DRAWING C-903)

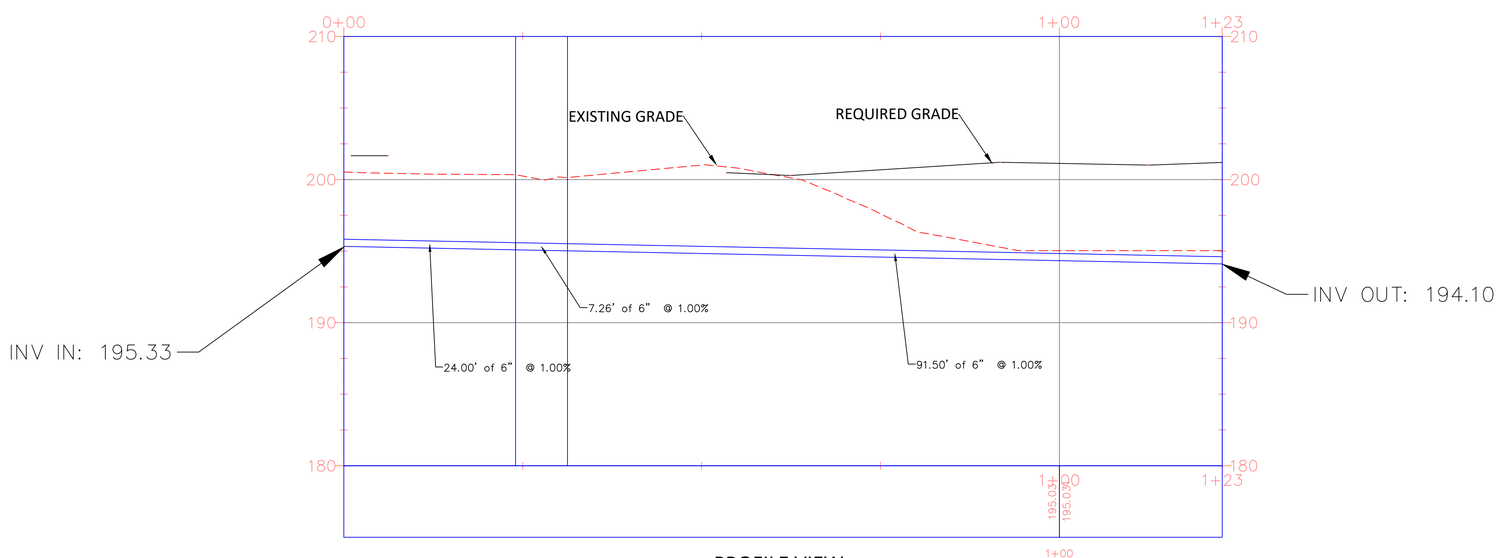

PROFILE VIEW
NORTH CLARIFIER TO SCUMP PUMP
SCALE: 1"=10'H/1"=5'V

W.L. BURLE
ENGINEERS, P.A.
111 South Walnut Street
Greenville, MS 38701

GS#323-024 ARPA INFR. - WASTE CENT. TREATMENT
SOUTH MISSISSIPPI CORRECTIONAL INSTITUTION
LEAKESVILLE, MISSISSIPPI

Burle Proj. No.: 08194-1-0122
File Name: PLAN AND PROFILES.dwg
Date: 04/29/2024
Scale: AS SHOWN
Drawn by: MJJ/JRG
Checked: DTM
Revisions:
Revisions:
Revisions:

PLAN & PROFILE - NORTH CLARIFIER TO SCUMP PUMP STATION

C-225
Drawing Number

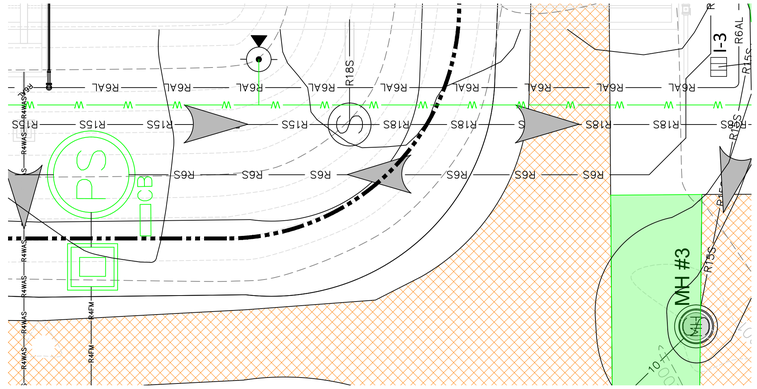

PLAN VIEW
SOUTH CLARIFIER TO SCUMP PUMP
SCALE: 1"=10'

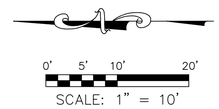

LEGEND:

200	EXISTING MAJOR CONTOURS (FEET)
201	EXISTING MINOR CONTOURS (FEET)
200	REQUIRED MAJOR CONTOURS (FEET)
201	REQUIRED MINOR CONTOURS (FEET)
R4WAS	REQUIRED 4" WAS LINE (SEE DETAIL DRAWING C-902)
R4S	REQUIRED 4" GRAVITY SEWER LINE (SEE DETAIL DRAWING C-902)
R6S	REQUIRED 6" GRAVITY SEWER LINE (SEE DETAIL DRAWING C-902)
R6AL	REQUIRED 6" AIR LINE (SEE DETAIL DRAWING C-902)
R12S	REQUIRED 12" GRAVITY SEWER LINE (SEE DETAIL DRAWING C-902)
R15S	REQUIRED 15" GRAVITY SEWER LINE (SEE DETAIL DRAWING C-902)
R18S	REQUIRED 18" GRAVITY SEWER LINE (SEE DETAIL DRAWING C-902)
8FM	REQUIRED 8" FORCE MAIN (SEE DETAIL DRAWING C-902)
W	REQUIRED WATER LINE (SEE DETAIL DRAWING C-903)
	REQUIRED GRAVEL (SEE DETAIL DRAWING C-904)
	EXISTING GRAVELED AREA
MH #1	EXISTING MANHOLE
PS	REQUIRED SCUM PUMPING STATION (SEE DETAIL DRAWING C-804)
	REQUIRED HYDRANT (SEE DETAIL DRAWING C-903)

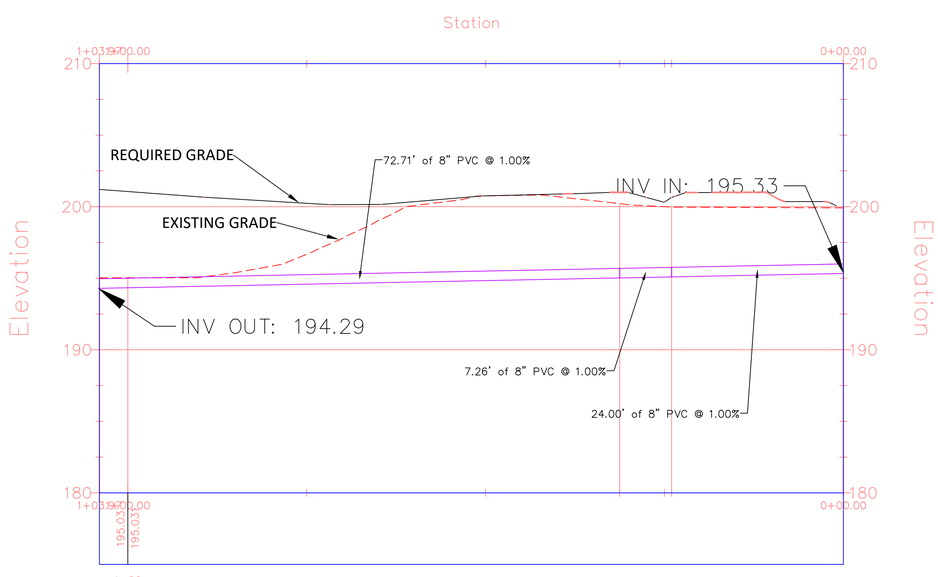

PROFILE VIEW
SOUTH CLARIFIER TO SCUMP PUMP
SCALE: 1"=10'H/1"=5'V

W.L. BURLE
ENGINEERS, P.A.
111 South Walnut Street
Greenville, MS 38701

GS#323-024 ARPA INFR. - WASTE CENT. TREATMENT
SOUTH MISSISSIPPI CORRECTIONAL INSTITUTION
LEAKESVILLE, MISSISSIPPI

Burle Proj. No.: 08194-1-0122
File Name: PLAN AND PROFILES.dwg
Date: 04/29/2024
Scale: AS SHOWN
Drawn by: MJJ/JRG
Checked: DTM
Revisions:
Revisions:
Revisions:

PLAN & PROFILE - SOUTH CLARIFIER TO SCUMP PUMP STATION

C-226
Drawing Number

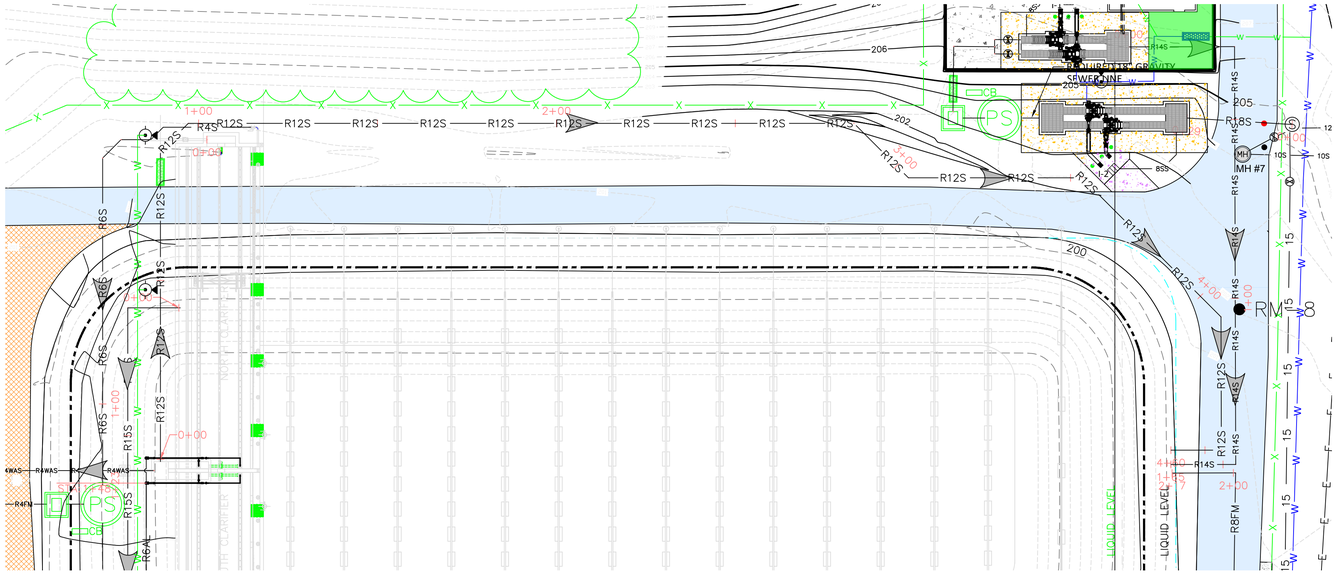

PLAN VIEW
RAS LINE TO EAST LAGOON
SCALE: 1"=20'

STRUCTURE TABLE				
STRUCTURE NAME:	INVERTS:	RIM ELEVATION	NORTHING	EASTING
RS1	INV OUT = 200.45	201.53	609076.6424	1054119.0189
RS2	INV IN = 200.09 INV OUT = 200.09	201.17	609163.4112	1054119.0189
RS3	INV IN = 200.04 INV OUT = 200.04	201.12	609171.1994	1054126.8071
RS4	INV IN = 199.26 INV OUT = 199.26	200.34	609171.1994	1054312.8689
RS5	INV IN = 199.17 INV OUT = 199.17	200.25	609155.9841	1054328.0841
RS6	INV IN = 198.97 INV OUT = 198.97	200.05	609155.9841	1054376.5691
RS7	INV IN = 198.74 INV OUT = 198.74	199.82	609117.1093	1054415.4439
RS8	INV IN = 198.58 INV OUT = 198.58	199.66	609079.8459	1054415.5490
RS9		0.00	609079.8459	1054401.4455

0' 10' 20' 40'
SCALE: 1" = 20'

Pipe Table				
NAME	SIZE	LENGTH	SLOPE	MATERIAL
RS1 TO RS2	12"	86.77'	0.42%	PVC
RS3 TO RS4	12"	186.06'	0.42%	PVC
RS4 TO RS5	12"	21.52'	0.42%	PVC
RS5 TO RS6	12"	48.48'	0.42%	PVC
RS6 TO RS7	12"	54.98'	0.42%	PVC
RS7 TO RS8	12"	37.26'	0.42%	PVC
RS8 TO RS9	12"	14.10'	0.42%	PVC

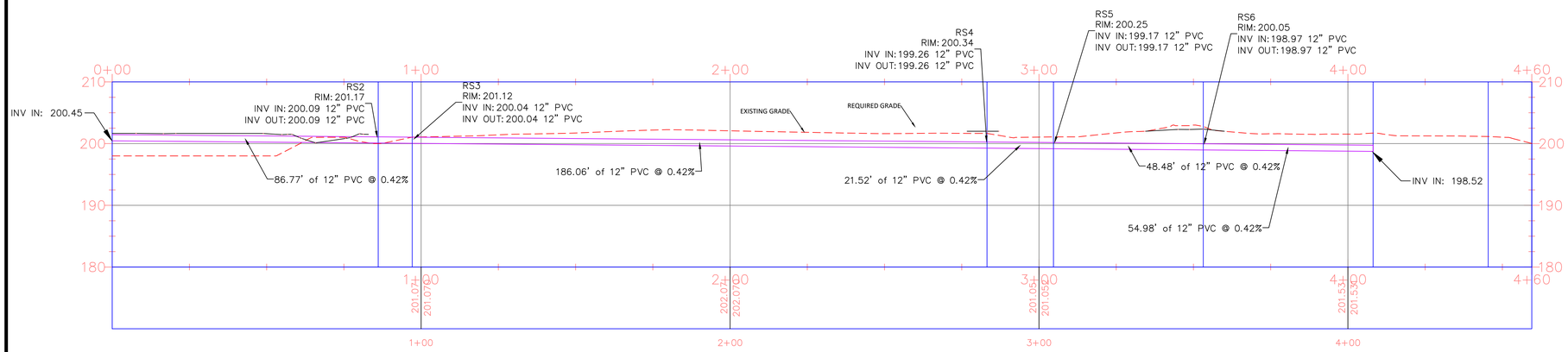

PROFILE VIEW
RAS LINE TO EAST LAGOON
SCALE: 1"=20'H/1"=10'V

LEGEND:

- 200 — EXISTING MAJOR CONTOURS (FEET)
- 201 — EXISTING MINOR CONTOURS (FEET)
- 200 — REQUIRED MAJOR CONTOURS (FEET)
- 201 — REQUIRED MINOR CONTOURS (FEET)
- W — EXISTING WATER LINE
- X — EXISTING CHAIN-LINK FENCE
- 8FM — REQUIRED 8" FORCE MAIN (SEE DETAIL DRAWING C-902)
- X — EXISTING CHAIN-LINK FENCE
- X — REQUIRED CHAIN-LINK FENCE (SEE DETAIL DRAWING C-905)
- E — EXISTING OVERHEAD ELECTRIC POWER LINE
- R4WAS — REQUIRED 4" WAS LINE (SEE DETAIL DRAWING C-902)
- R6S — REQUIRED 6" GRAVITY SEWER LINE (SEE DETAIL DRAWING C-902)
- R12S — REQUIRED 12" GRAVITY SEWER LINE (SEE DETAIL DRAWING C-902)
- R14S — REQUIRED 14" GRAVITY SEWER LINE (SEE DETAIL DRAWING C-902)
- R15S — REQUIRED 15" GRAVITY SEWER LINE (SEE DETAIL DRAWING C-902)
- R18S — REQUIRED 18" GRAVITY SEWER LINE (SEE DETAIL DRAWING C-902)
- W — REQUIRED WATER LINE (SEE DETAIL DRAWING C-903)
- 8SS — REQUIRED 8 INCH STORM SEWER PIPE (SEE DETAIL DRAWING C-907
- EXISTING TREE LINE TO REMAIN
- PS — REQUIRED SCUM PUMPING STATION (SEE DETAIL DRAWING C-804)
- REQUIRED HYDRANT (SEE DETAIL DRAWING C-903)
- REQUIRED GRAVEL (SEE DETAIL DRAWING C-904)
- EXISTING GRAVELED AREA
- MH #1 — EXISTING MANHOLE
- I-3 — REQUIRED SURFACE INLET (SEE DETAIL DRAWING C-907) (SEE TABLE DRAWING C-204)

W. L. BURLE
ENGINEERS, P.A.
111 South Walnut Street
Greenville, MS 38701

THOMAS MATTHEW MCGEE
MISSISSIPPI
PE 18903
STATE OF MISSISSIPPI
04/29/24

GS#323-024 ARPA INFR. - WASTE
CENT. TREATMENT
SOUTH MISSISSIPPI CORRECTIONAL INSTITUTION
LEAKESVILLE, MISSISSIPPI

Burle Proj. No.: 08194-1-0122
File Name: PLAN AND PROFILES.dwg
Date: 04/29/2024
Scale: AS SHOWN
Drawn by: MJJ/JRG
Checked: DTM
Revisions:
Revisions:
Revisions:

PLAN & PROFILE -
RAS LINE TO EAST LAGOON

C-227
Drawing Number

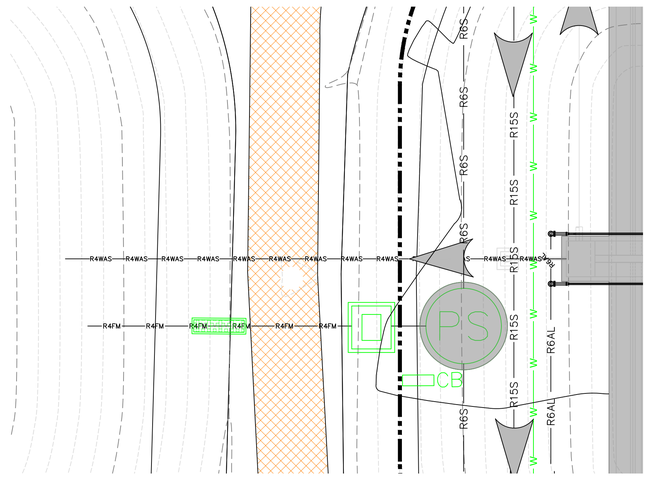

PLAN VIEW
WAS LINE TO WEST LAGOON
SCALE: 1"=10'

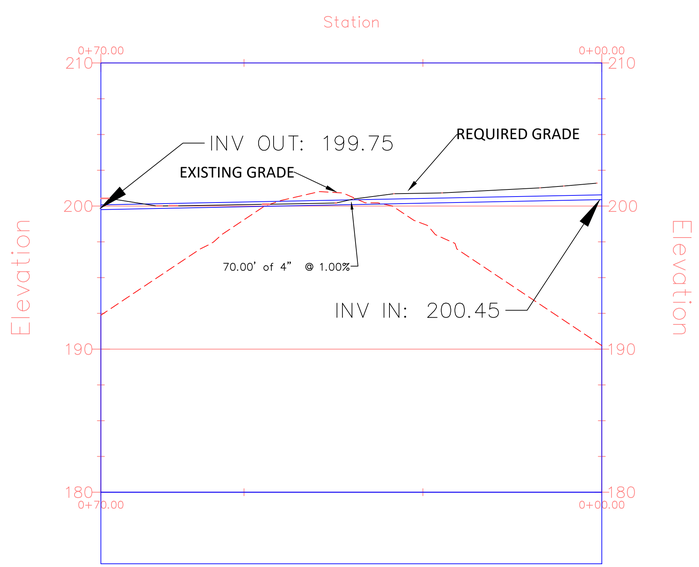

PROFILE VIEW
WAS LINE TO WEST LAGOON
SCALE: 1"=10'H/1"=5'V

0' 5' 10' 20'
SCALE: 1" = 10'

LEGEND:

200	EXISTING MAJOR CONTOURS (FEET)
201	EXISTING MINOR CONTOURS (FEET)
200	REQUIRED MAJOR CONTOURS (FEET)
201	REQUIRED MINOR CONTOURS (FEET)
W	REQUIRED WATER LINE (SEE DETAIL DRAWING C-903)
R4WAS	REQUIRED 4" WAS LINE (SEE DETAIL DRAWING C-902)
R6S	REQUIRED 6" GRAVITY SEWER LINE (SEE DETAIL DRAWING C-902)
R12S	REQUIRED 12" GRAVITY SEWER LINE (SEE DETAIL DRAWING C-902)
R15S	REQUIRED 15" GRAVITY SEWER LINE (SEE DETAIL DRAWING C-902)
R6AL	REQUIRED 6" AIR LINE (SEE DETAIL DRAWING C-902)
R4FM	REQUIRED 4" FORCE MAIN (SEE DETAIL DRAWING C-902)
PS	REQUIRED SCUM PUMPING STATION (SEE DETAIL DRAWING C-804)
	FLOW DIRECTION
	EXISTING GRAVEL AREA

W.L. BURLE
ENGINEERS, P.A.
111 South Walnut Street
Greenville, MS 38701

GS#323-024 ARPA INFR. - WASTE CENT. TREATMENT
SOUTH MISSISSIPPI CORRECTIONAL INSTITUTION
LEAKESVILLE, MISSISSIPPI

Burle Proj. No.: 08194-1-0122
File Name: PLAN AND PROFILES.dwg
Date: 04/29/2024
Scale: AS SHOWN
Drawn by: MJJ/JRG
Checked: DTM
Revisions:
Revisions:
Revisions:

PLAN & PROFILE - WAS LINE TO WEST LAGOON

C-228
Drawing Number

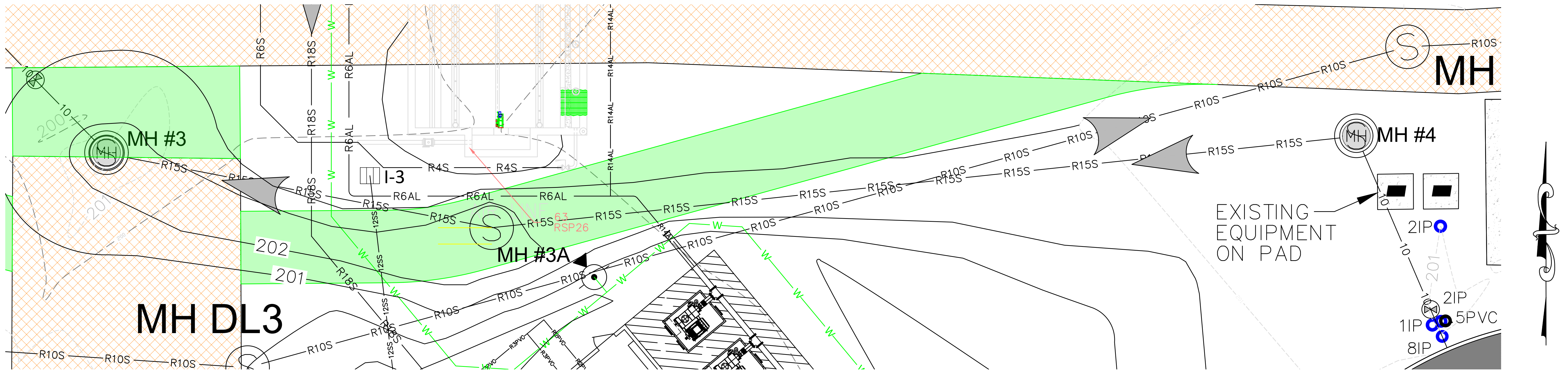

0' 5' 10' 20'
SCALE: 1" = 10'

PLAN VIEW
MH#3 TO MH#4

SCALE: 1"=10'

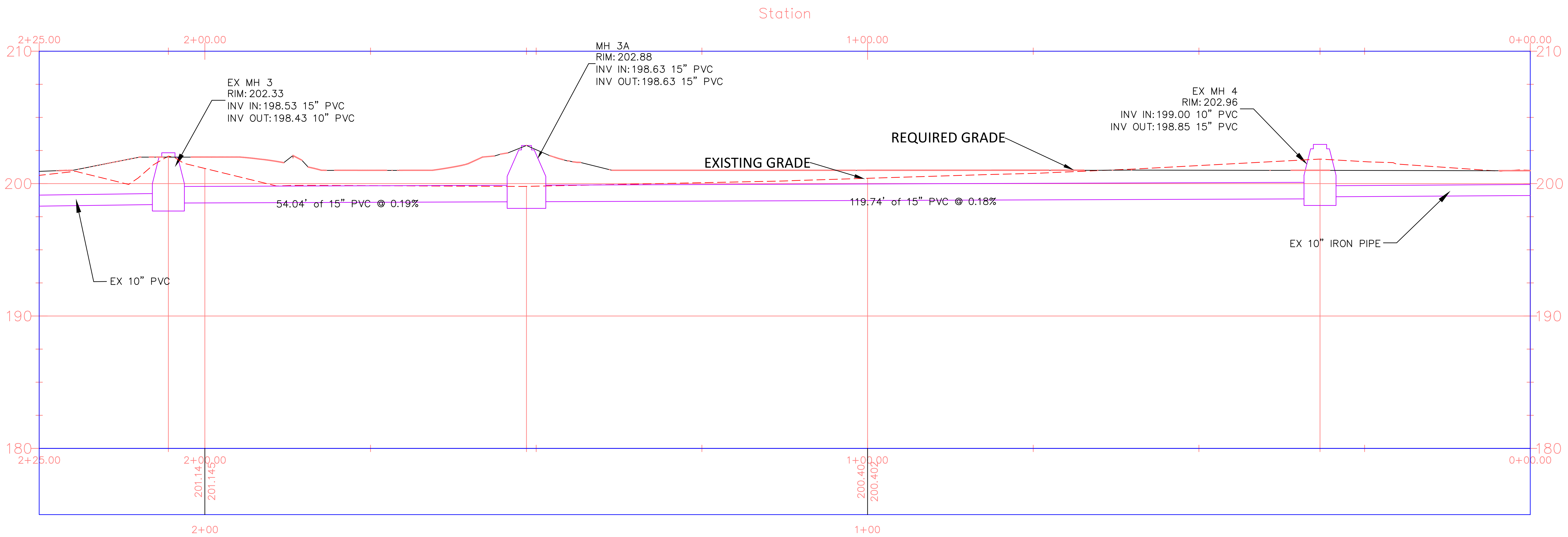

PROFILE VIEW
MH#3 TO MH#4

SCALE: 1"=10'H/1"=5'V

LEGEND:

- - - - 200 - - - -	EXISTING MAJOR CONTOURS (FEET)
201	EXISTING MINOR CONTOURS (FEET)
—— 200 ——	REQUIRED MAJOR CONTOURS (FEET)
—— 201 ——	REQUIRED MINOR CONTOURS (FEET)
—W—W—W—W—W—	REQUIRED WATER LINE (SEE DETAIL DRAWING C-903)
—R4S—R4S—R4S—	REQUIRED 4" GRAVITY SEWER LINE (SEE DETAIL DRAWING C-902)
—R10S—R10S—R10S—	REQUIRED 10" GRAVITY SEWER LINE (SEE DETAIL DRAWING C-902)
—R15S—R15S—R15S—R15S—R15S—	REQUIRED 15" GRAVITY SEWER LINE (SEE DETAIL DRAWING C-902)
—R18S—R18S—R18S—	REQUIRED 18" GRAVITY SEWER LINE (SEE DETAIL DRAWING C-902)
—R6AL—R6AL—R6AL—	REQUIRED 6" AIR LINE (SEE DETAIL DRAWING C-902)
—12SS—12SS—12SS—12SS—12SS—	REQUIRED 12 INCH STORM SEWER PIPE (SEE DETAIL DRAWING C-907)
MH MH #1	EXISTING MANHOLE
⧖	REQUIRED PINCH VALVE
○ .5PVC	EXISTING 0.5 INCH PVC/SPIGOT
○ 1IP	EXISTING 1 INCH IRON PIPE
○ 2IP	EXISTING 2 INCH IRON PIPE
○ 8IP	EXISTING 8 INCH IRON PIPE
▼	REQUIRED HYDRANT (SEE DETAIL DRAWING C-903)
►	FLOW DIRECTION
🟩	REQUIRED GRAVEL (SEE DETAIL DRAWING C-904)
▨	EXISTING GRAVEL AREA
▥ I-3	REQUIRED SURFACE INLET (SEE DETAIL DRAWING C-907) (SEE TABLE DRAWING C-204)

W. L. BURLE
ENGINEERS, P.A.
111 South Walnut Street
Greenville, MS 38701

DARRELL THOMAS MARTINEK
PE 15149
27April24

GS#323-024 ARPA INFR. - WASTE
CENT. TREATMENT
SOUTH MISSISSIPPI CORRECTIONAL INSTITUTION
LEAKESVILLE, MISSISSIPPI

Burle Proj. No.:	08194-1-0122
File Name:	PLAN AND PROFILES.dwg
Date:	04/29/2024
Scale:	AS SHOWN
Drawn by:	MJJ/JRG
Checked:	DTM
Revisions:	
Revisions:	
Revisions:	

PLAN & PROFILE -
MH#3 TO MH#4

C-229
Drawing Number

0' 2.5' 5' 10'
SCALE: 1" = 5'

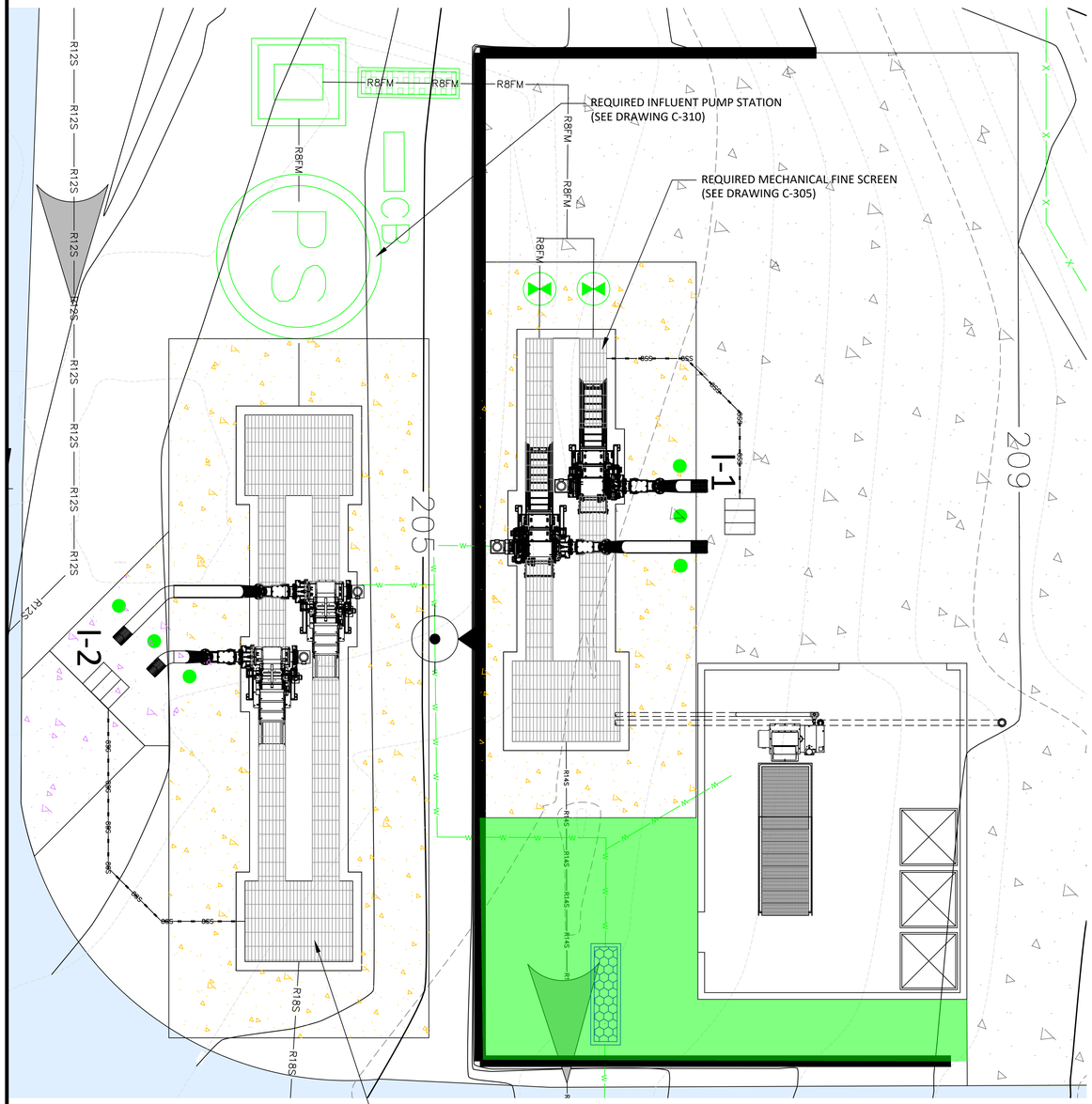

PLAN VIEW - REQUIRED HEADWORKS

SCALE: 1" = 5'

LEGEND:

200	EXISTING MAJOR CONTOURS (FEET)
201	EXISTING MINOR CONTOURS (FEET)
200	REQUIRED MAJOR CONTOURS (FEET)
201	REQUIRED MINOR CONTOURS (FEET)
R8FM	REQUIRED 8" FORCE MAIN
R12S	REQUIRED 12" GRAVITY SEWER LINE
R14S	REQUIRED 14" GRAVITY SEWER LINE
W	REQUIRED WATER LINE
8SS	REQUIRED 8" STORM SEWER WATER LINE
	REQUIRED IN-LINE FLOW METER (SEE DRAWING C-901)
	REQUIRED BACK FLOW PREVENTOR (SEE DRAWING C-903)
I-2	REQUIRED SURFACE INLET (SEE DETAIL DRAWING C-907)
	REQUIRED PINCH VALVE (SEE DETAIL DRAWING C-901)
	REQUIRED BOLLARD (SEE DRAWING C-904)
	EXISTING ASPHALT PAVEMENT
	REQUIRED 4" CONCRETE (SEE DRAWING C-904)
	REQUIRED 8" CONCRETE (SEE DRAWING C-904)
	REQUIRED HYDRANT (SEE DRAWING C-903)
	FLOW DIRECTION

W. L. BURLE
ENGINEERS, P.A.
111 South Walnut Street
Greenville, MS 38701

GS#323-024 ARPA INFR. - WASTE
CENT. TREATMENT
SOUTH MISSISSIPPI CORRECTIONAL INSTITUTION
LEAKESVILLE, MISSISSIPPI

Burle Proj. No.: 08194-1-0122
File Name: C-301 - PLAN SHEET - HEADWORKS.dwg
Date: 04/29/2024
Scale: 1"=5'
Drawn by: MJJ/JRG
Checked: DTM
Revisions:
Revisions:
Revisions:

PLAN VIEW - HEADWORKS

C-301
Drawing Number

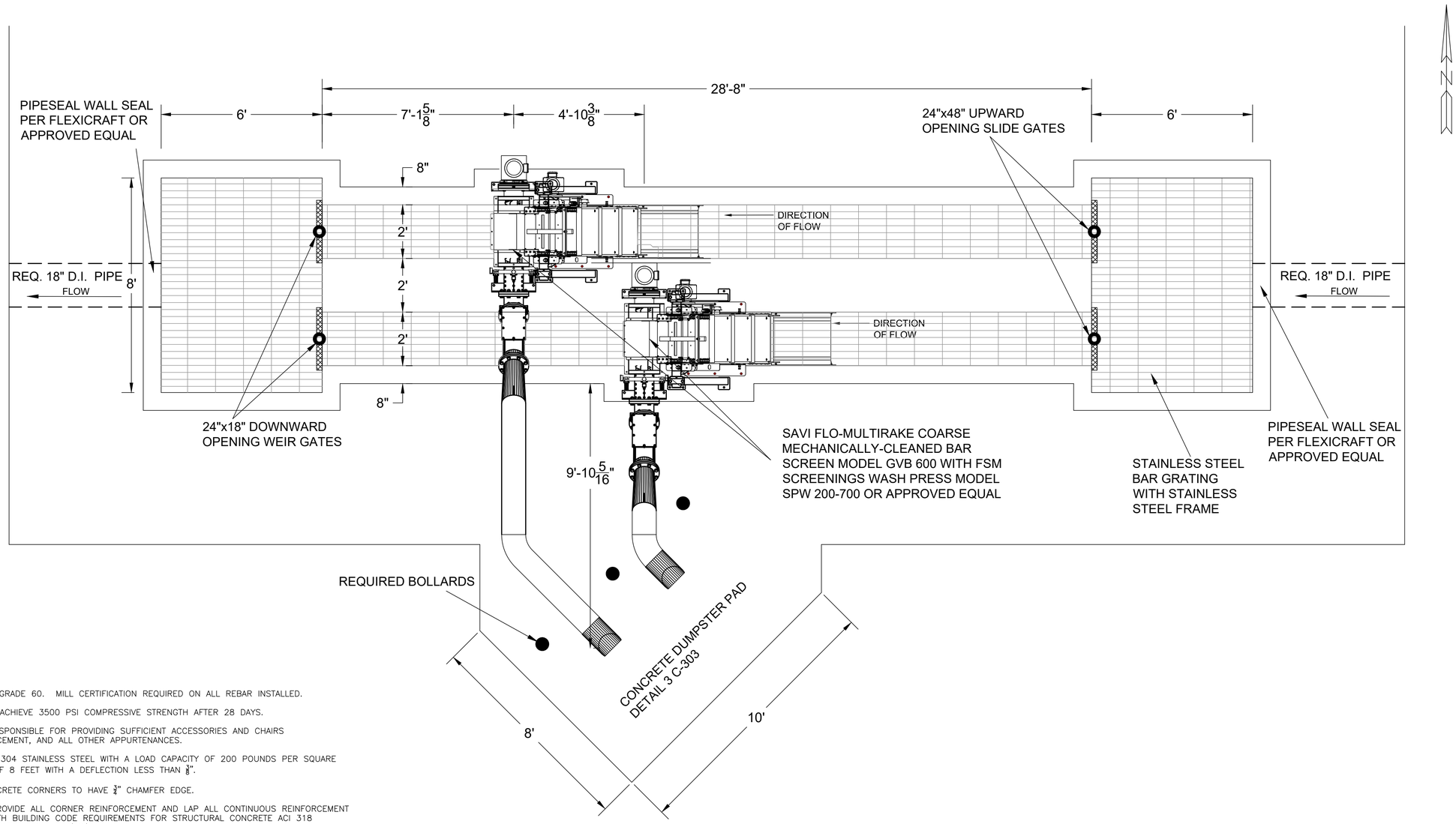

GENERAL NOTES:

1. ALL REBAR TO BE GRADE 60. MILL CERTIFICATION REQUIRED ON ALL REBAR INSTALLED.
2. ALL CONCRETE TO ACHIEVE 3500 PSI COMPRESSIVE STRENGTH AFTER 28 DAYS.
3. CONTRACTOR IS RESPONSIBLE FOR PROVIDING SUFFICIENT ACCESSORIES AND CHAIRS TO PLACE REINFORCEMENT, AND ALL OTHER APPURTENANCES.
4. BAR GRATE TO BE 304 STAINLESS STEEL WITH A LOAD CAPACITY OF 200 POUNDS PER SQUARE FOOT AT A SPAN OF 8 FEET WITH A DEFLECTION LESS THAN 3/8".
5. ALL EXPOSED CONCRETE CORNERS TO HAVE 3/4" CHAMFER EDGE.
6. CONTRACTOR TO PROVIDE ALL CORNER REINFORCEMENT AND LAP ALL CONTINUOUS REINFORCEMENT IN ACCORDANCE WITH BUILDING CODE REQUIREMENTS FOR STRUCTURAL CONCRETE ACI 318 BY AMERICAN CONCRETE INSTITUTE (ACI).
7. CONTRACTOR TO BACKFILL AROUND FINISHED CONCRETE STRUCTURE WITH EXISTING EXCAVATED SOIL. ALL BACKFILL SOIL AND EXISTING FOUNDATION SOILS TO BE COMPACTED TO 95% STANDARD PROCTOR ASTM D698.
8. CONTRACTOR TO PROVIDE POTABLE WATER SOURCE AND REQUIRED ELECTRICAL POWER AS REQUIRED BY MANUFACTURER EQUIPMENT SPECIFICATIONS.

PLAN VIEW - COARSE MECHANICAL BAR SCREENS LAYOUT

SCALE: 1/2" = 1'

W. L. BURLE
ENGINEERS, P.A.
111 South Walnut Street
Greenville, MS 38701

GS#323-024 ARPA INFR. - WASTE CENT. TREATMENT
SOUTH MISSISSIPPI CORRECTIONAL INSTITUTION
LEAKESVILLE, MISSISSIPPI

Burle Proj. No.: 08194-1-0122
File Name: HEADWORKS COARSE-FINE SCREEN.DWG
Date: 04/29/2024
Scale: AS SHOWN
Drawn by: MJC
Checked: DTM
Revisions:
Revisions:
Revisions:

PLAN VIEW - COURSE MECHANICAL BAR SCREENS LAYOUT

C-302
Drawing Number

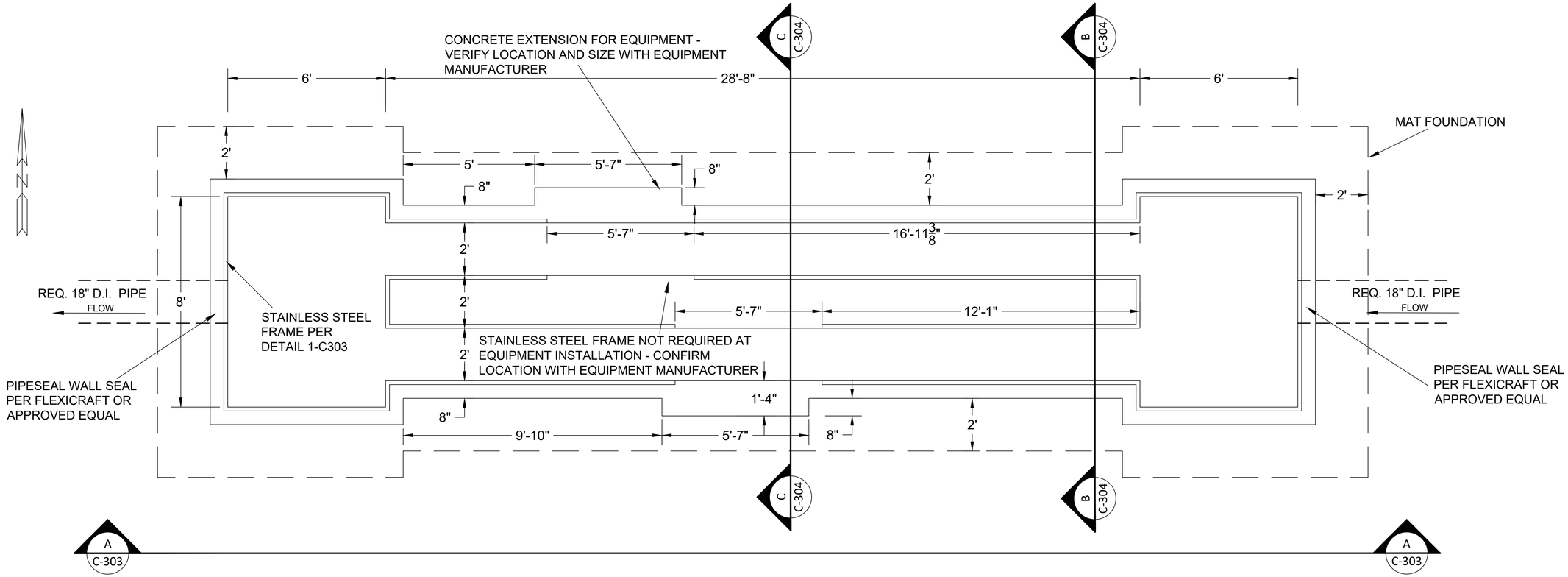

PLAN VIEW - CONCRETE STRUCTURE FOR COARSE MECHANICAL BAR SCREENS

SCALE: 1/2" = 1'

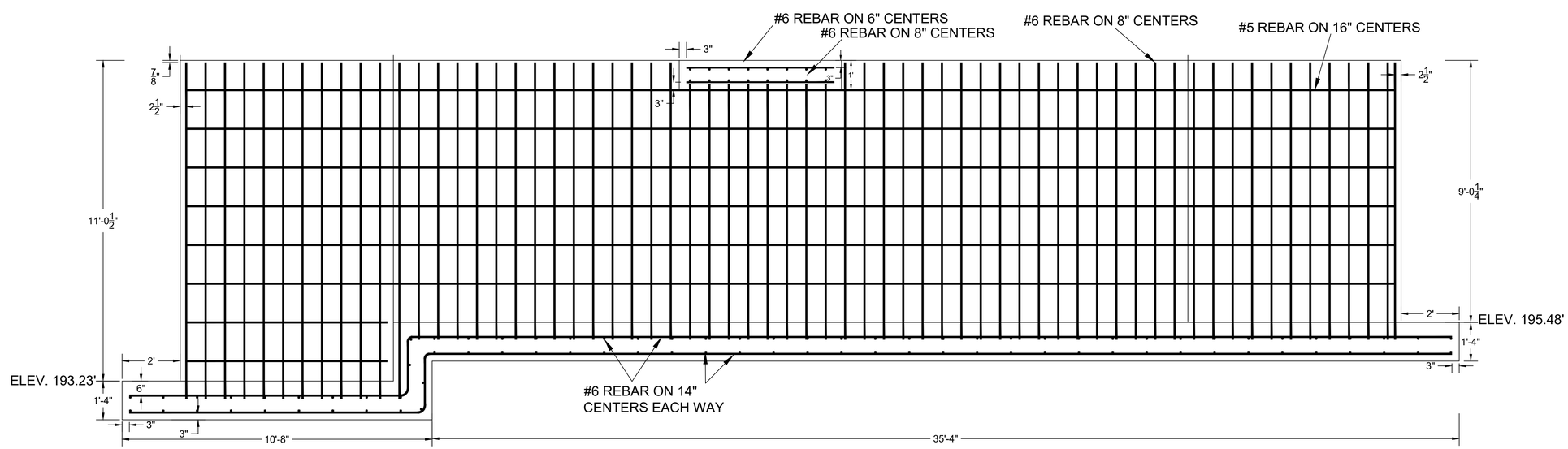

A C-303

SECTION - COARSE MECHANICAL BAR SCREENS

SCALE: 1/2" = 1'

W. L. BURLE
ENGINEERS, P.A.
111 South Walnut Street
Greenville, MS 38701

GSH323-024 ARPA INFR. - WASTE CENT. TREATMENT
SOUTH MISSISSIPPI CORRECTIONAL INSTITUTION
LEAKESVILLE, MISSISSIPPI

Burle Proj. No.: 08194-1-0122

File Name: HEADWORKS COARSE-FINE SCREEN.DWG

Date: 04/29/2024

Scale: AS SHOWN

Drawn by: MJC

Checked: DTM

Revisions:

Revisions:

Revisions:

PLAN VIEW - CONCRETE STRUCTURE FOR COARSE MECHANICAL BAR SCREENS

C-303
Drawing Number

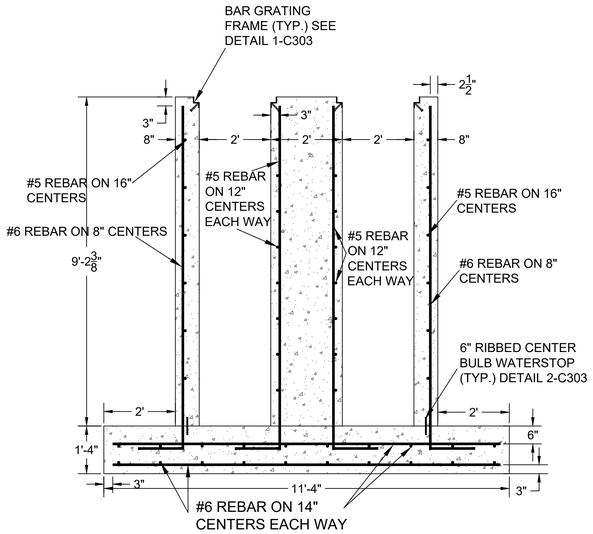

B
C-304

SECTION - COARSE MECHANICAL BAR SCREENS

SCALE: 1/2" = 1'

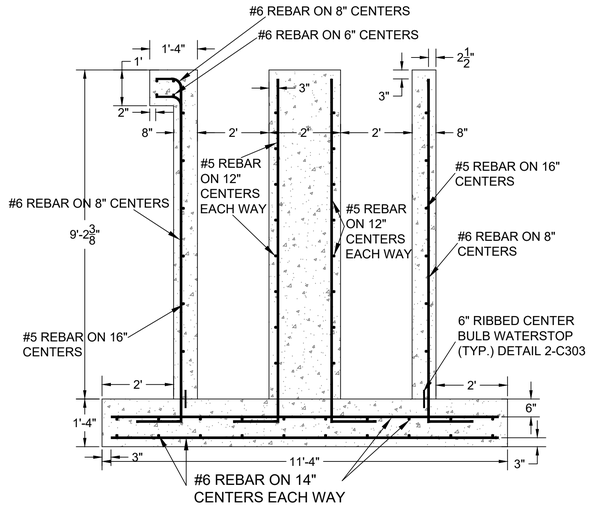

C
C-304

SECTION - COARSE MECHANICAL BAR SCREENS

SCALE: 1/2" = 1'

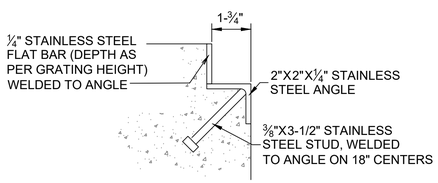

1
C-304

DETAIL - GRATING FRAME

N.T.S.

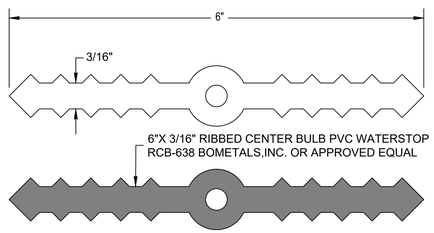

ALL WATERSTOPS SHALL BE STORED, HANDLED, AND INSTALLED AS PER THE MANUFACTURER'S REQUIREMENTS.

2
C-304

DETAIL - WATERSTOP

N.T.S.

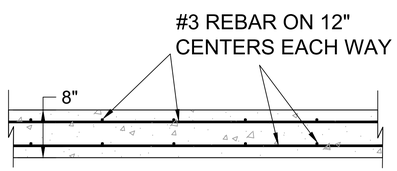

3
C-304

CONCRETE DUMPSTER PAD DETAIL

N.T.S.

W. L. BURLE
ENGINEERS, P.A.
111 South Walnut Street
Greenville, MS 38701

GS#323-024 ARPA INFR. - WASTE CENT. TREATMENT
SOUTH MISSISSIPPI CORRECTIONAL INSTITUTION
LEAKESVILLE, MISSISSIPPI

Burle Proj. No.: 08194-1-0122

File Name: HEADWORKS COARSE-FINE SCREEN.DWG

Date: 04/29/2024

Scale: AS SHOWN

Drawn by: MJC

Checked: DTM

Revisions:

Revisions:

Revisions:

COARSE SCREEN SECTIONS & DETAILS

C-304
Drawing Number

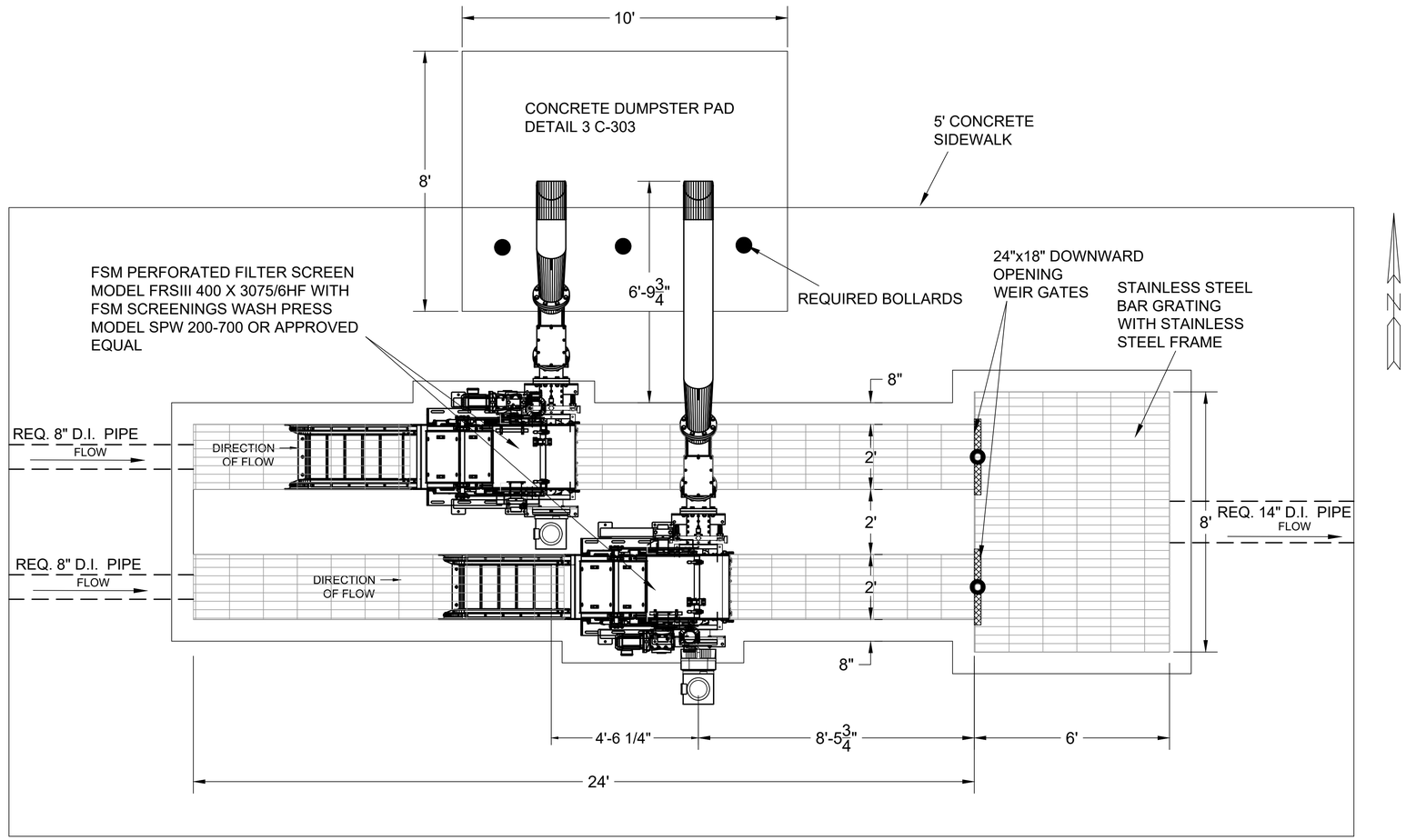

PLAN VIEW - FINE MECHANICAL BAR SCREENS LAYOUT

SCALE: 1/2" = 1'

GENERAL NOTES:

1. ALL REBAR TO BE GRADE 60. MILL CERTIFICATION REQUIRED ON ALL REBAR INSTALLED.
2. ALL CONCRETE TO ACHIEVE 3500 PSI COMPRESSIVE STRENGTH AFTER 28 DAYS.
3. CONTRACTOR IS RESPONSIBLE FOR PROVIDING SUFFICIENT ACCESSORIES AND CHAIRS TO PLACE REINFORCEMENT, AND ALL OTHER APPURTENANCES.
4. BAR GRATE TO BE 304 STAINLESS STEEL WITH A LOAD CAPACITY OF 200 POUNDS PER SQUARE FOOT AT A SPAN OF 8 FEET WITH A DEFLECTION LESS THAN 3/8".
5. ALL EXPOSED CONCRETE CORNERS TO HAVE 3/4" CHAMFER EDGE.
6. CONTRACTOR TO PROVIDE ALL CORNER REINFORCEMENT AND LAP ALL CONTINUOUS REINFORCEMENT IN ACCORDANCE WITH BUILDING CODE REQUIREMENTS FOR STRUCTURAL CONCRETE ACI 318 BY AMERICAN CONCRETE INSTITUTE (ACI).
7. CONTRACTOR TO BACKFILL AROUND FINISHED CONCRETE STRUCTURE WITH EXISTING EXCAVATED SOIL. ALL BACKFILL SOIL AND EXISTING FOUNDATION SOILS TO BE COMPACTED TO 95% STANDARD PROCTOR ASTM D698.
8. CONTRACTOR TO PROVIDE POTABLE WATER SOURCE AND REQUIRED ELECTRICAL POWER AS REQUIRED BY MANUFACTURER EQUIPMENT SPECIFICATIONS.

W. L. BURLE
ENGINEERS, P.A.
111 South Walnut Street
Greenville, MS 38701

GS#323-024 ARPA INFR. - WASTE CENT. TREATMENT
SOUTH MISSISSIPPI CORRECTIONAL INSTITUTION
LEAKESVILLE, MISSISSIPPI

Burle Proj. No.: 08194-1-0122

File Name: HEADWORKS COARSE-FINE SCREEN.DWG

Date: 04/29/2024

Scale: AS SHOWN

Drawn by: MJC

Checked: DTM

Revisions:

Revisions:

Revisions:

PLAN VIEW - FINE MECHANICAL BAR SCREENS LAYOUT

C-305
Drawing Number

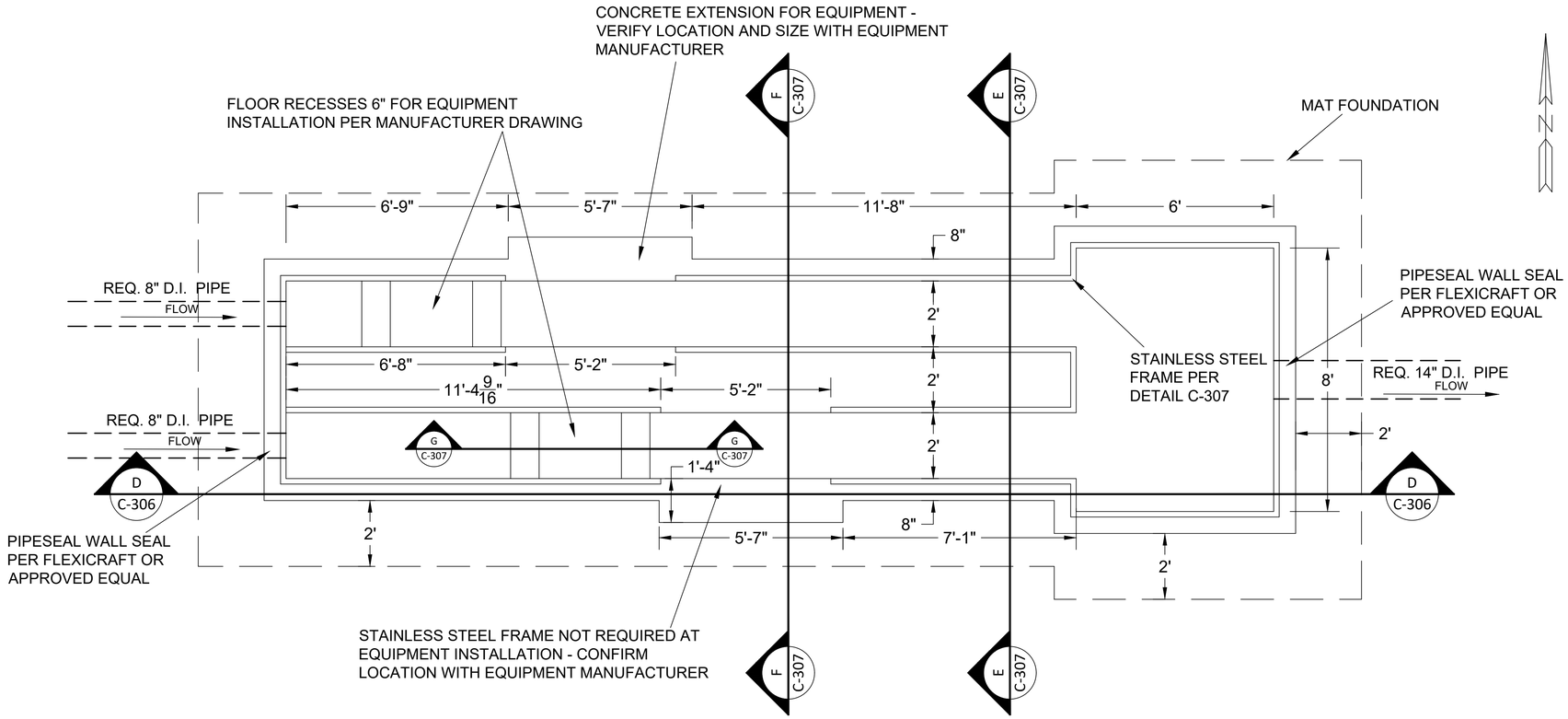

PLAN VIEW - CONCRETE STRUCTURE FOR FINE MECHANICAL BAR SCREENS

SCALE: 1/2" = 1'

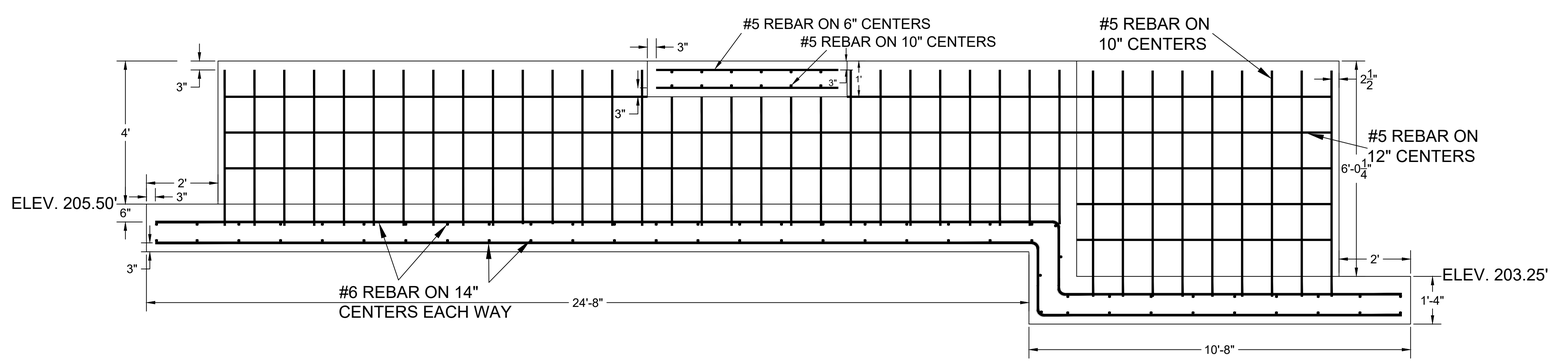

D C-306

SECTION - FINE MECHANICAL BAR SCREENS

SCALE: 1/2" = 1'

W. L. BURLE
ENGINEERS, P.A.
111 South Walnut Street
Greenville, MS 38701

GS#323-024 ARPA INFR. - WASTE CENT. TREATMENT
SOUTH MISSISSIPPI CORRECTIONAL INSTITUTION
LEAKESVILLE, MISSISSIPPI

Burle Proj. No.: 08194-1-0122
File Name: HEADWORKS COARSE-FINE SCREEN.DWG
Date: 04/29/2024
Scale: AS SHOWN
Drawn by: MJC
Checked: DTM
Revisions:
Revisions:
Revisions:

PLAN VIEW - CONCRETE STRUCTURE FOR FINE MECHANICAL BAR SCREENS

C-306
Drawing Number

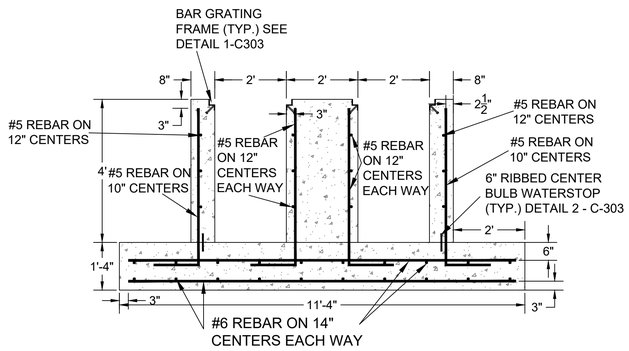

E
C-307

SECTION - FINE MECHANICAL BAR SCREENS

SCALE: 1/2" = 1'

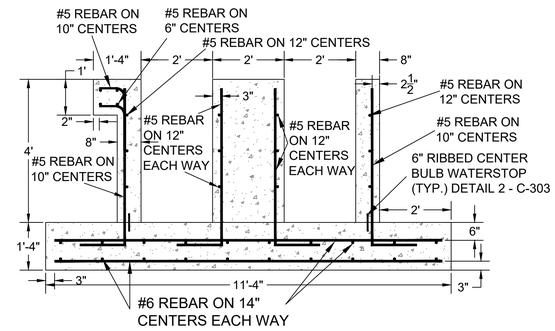

F
C-307

SECTION - FINE MECHANICAL BAR SCREENS

SCALE: 1/2" = 1'

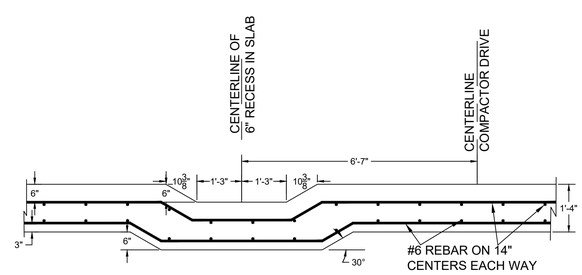

G
C-307

SECTION - FINE MECHANICAL BAR SCREENS

SCALE: 1/2" = 1'

W. L. BURLE
ENGINEERS, P.A.
111 South Walnut Street
Greenville, MS 38701

GS#323-024 ARPA INFR. - WASTE CENT. TREATMENT
SOUTH MISSISSIPPI CORRECTIONAL INSTITUTION
LEAKESVILLE, MISSISSIPPI

Burle Proj. No.: 08194-1-0122

File Name: HEADWORKS COARSE-FINE SCREEN.DWG

Date: 04/29/2024

Scale: AS SHOWN

Drawn by: MJC

Checked: DTM

Revisions:

Revisions:

Revisions:

FINE SCREEN SECTIONS & DETAILS

C-307
Drawing Number

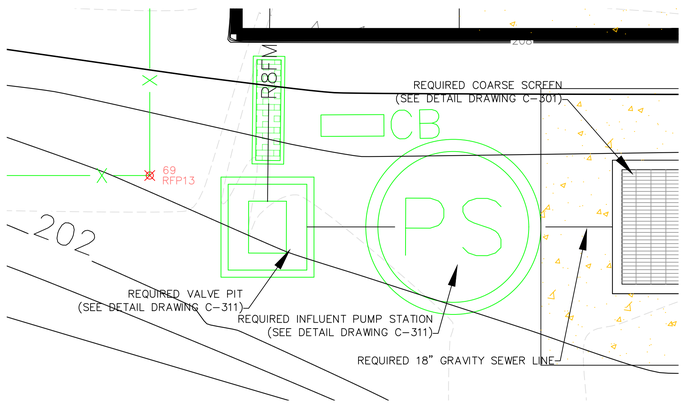

PLAN VIEW - INFLUENT PUMP STATION

SCALE: 1" = 30'

0' 5' 10' 20'

SCALE: 1" = 10'

LEGEND:

200	EXISTING MAJOR CONTOURS (FEET)
201	EXISTING MINOR CONTOURS (FEET)
200	REQUIRED MAJOR CONTOURS (FEET)
201	REQUIRED MINOR CONTOURS (FEET)
	REQUIRED CONCRETE (SEE DETAIL DRAWING C-904)
PS	REQUIRED INFLUENT PUMP STATION (SEE DRAWING C-311)
	REQUIRED IN-LINE FLOWMETER (SEE DRAWING C-901)
R8FM	REQUIRED 8" FORCE MAIN
CB	REQUIRED CONTROL BOX (SEE DETAIL DRAWING E-310)

W. L. BURLE
ENGINEERS, P.A.
111 South Walnut Street
Greenville, MS 38701

GS#323-024 ARPA INFR. - WASTE CENT. TREATMENT
SOUTH MISSISSIPPI CORRECTIONAL INSTITUTION
LEAKESVILLE, MS.

Burle Proj. No.: 08194-1-0122

File Name: C-310 PLAN VIEW - INFLUENT PUMP STATION.DWG

Date: 04/29/2024

Scale: SHOWN

Drawn by: JRG

Checked: DTM

Revisions:

Revisions:

Revisions:

PLAN VIEW - INFLUENT PUMP STATION

C-310

Drawing Number

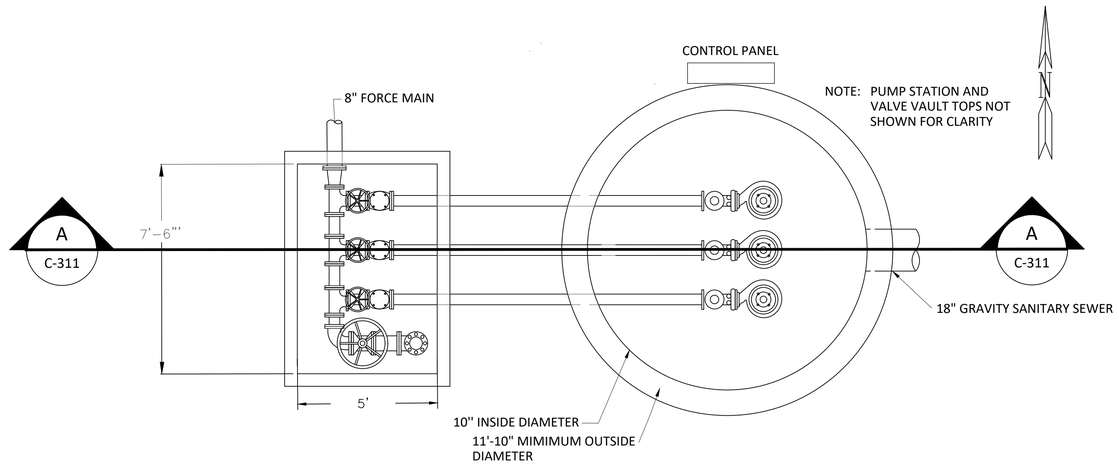

DETAIL - REQUIRED INFLUENT PUMP STATION

NOT TO SCALE

NOTES:

1. STANDARD PRECAST CONCRETE SECTIONS SHALL COMPLY WITH ASTM C478.
2. ALL PRECAST CONCRETE SECTIONS SHALL BE COATED WITH A MINIMUM OF 20 MIL THICKNESS COAL TAR EPOXY INSIDE AND OUTSIDE.
3. ALL JOINTS SHALL BE COATED INSIDE AND OUTSIDE. JOINT MATERIAL SHALL BE PREFORMED FLEXIBLE MASTIC AND SHALL COMPLY WITH ASTM C990.
4. ALL PIPE ENTERING WETWELLS SHALL BE FITTED WITH WATERSTOP, SEE DETAIL DRAWING C=901.

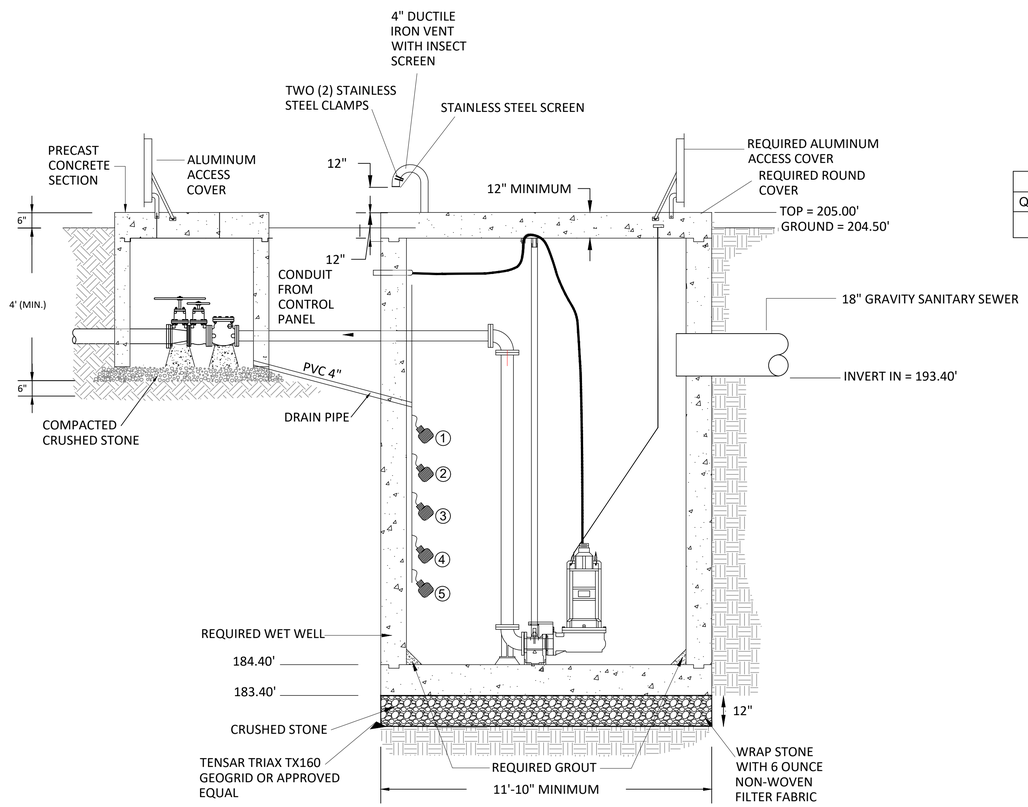

PUMP STATION CONDITIONS				
QUANTITY	H.P.	G.P.M.	T.D.H.	VOLTAGE
3	15	1,100	23	460(3 PH.)

FLOAT SETTING TABLE		
	ALARM NAME	ELEVATION
1	HIGH LEVEL ALARM	192.90
2	LAG PUMP 2 ON	192.40
3	LAG PUMP 1 ON	191.90
4	LEAD PUMP ON	191.40
5	PUMPS OFF	187.65

A
C-311

SECTION- REQUIRED INFLUENT PUMP STATION

NOT TO SCALE

W. L. BURLE
ENGINEERS, P. A.
111 SOUTH WALNUT STREET
GREENVILLE, MS 38701

THOMAS MATTHEW CHRISTOPHER
STATE OF MISSISSIPPI
4/29/24

GS#323-024 ARPA INFR. - WASTE CENT. TREATMENT
SOUTH MISSISSIPPI CORRECTIONAL INSTITUTION
LEAKESVILLE, MISSISSIPPI

BURLE PROJECT NUMBER: 08194-1-0122

FILE NAME: C-311 INFLUENT PUMP STATION.dwg

DATE: 04/29/2024

SCALE: NOT TO SCALE

DRAWN BY: JRG

CHECKED BY: DTM

REVISIONS:

REVISIONS:

REVISIONS:

DETAILS - INFLUENT PUMP STATION

C-311
DRAWING NUMBER

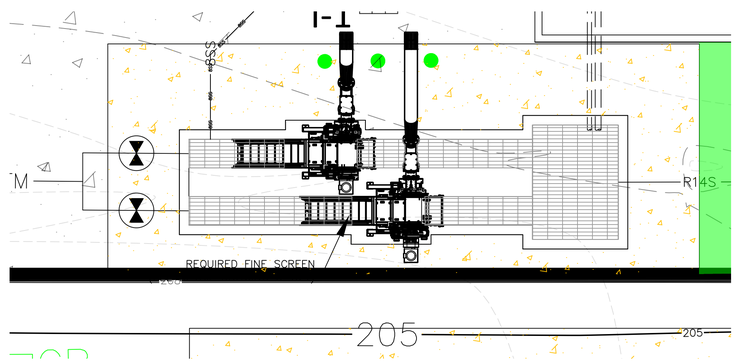

PLAN VIEW - FINE SCREEN

SCALE: 1" = 10'

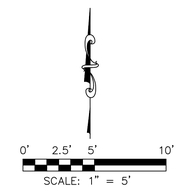

LEGEND:

200	EXISTING MAJOR CONTOURS (FEET)
201	EXISTING MINOR CONTOURS (FEET)
200	REQUIRED MAJOR CONTOURS (FEET)
201	REQUIRED MINOR CONTOURS (FEET)
R8FM R8FM	REQUIRED 8" FORCE MAIN
R14S	REQUIRED 14" GRAVITY SEWER LINE
	REQUIRED CONCRETE (SEE DETAIL DRAWING C-904)
	REQUIRED IN-LINE FLOWMETER (SEE DRAWING C-901)
R8FM R8FM	REQUIRED 8" FORCE MAIN
R14S	REQUIRED 14" GRAVITY SEWER LINE
	REQUIRED PINCH VALVE (SEE DETAIL DRAWING C-901)
	REQUIRED BOLLARD (SEE DRAWING C-904)

W. L. BURLE
ENGINEERS, P.A.
111 South Walnut Street
Greenville, MS 38701

GS#323-024 ARPA INFR. - WASTE CENT. TREATMENT
SOUTH MISSISSIPPI CORRECTIONAL INSTITUTION
LEAKESVILLE, MS.

Burle Proj. No.: 08194-1-0122

File Name: C-310 PLAN VIEW - FINE SCREEN.DWG

Date: 04/29/2024

Scale: SHOWN

Drawn by: JRG

Checked: DTM

Revisions:

Revisions:

Revisions:

PLAN VIEW - FINE SCREEN

C-320
Drawing Number

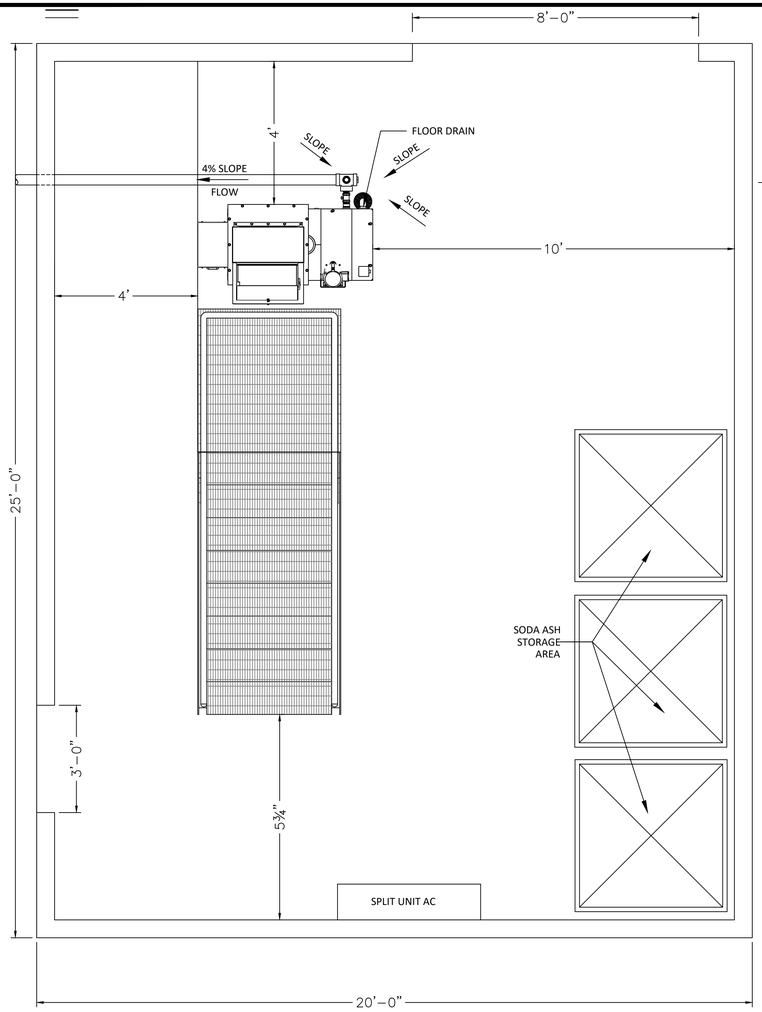

PLAN VIEW - SODA ASH BUILDING

NOT TO SCALE

NOTES:

1. ENCLOSED METAL BUILDING SHALL BE PRE-ENGINEERED, METAL FRAMED STRUCTURE. PLANS AND SPECIFICATIONS BEARING PROFESSIONAL ENGINEERS'S SEAL SHALL BE SUBMITTED TO THE ENGINEER FOR APPROVAL. COLOR OF METAL BUILDING EXTERIOR SHEETS SHALL BE SELECTED BY THE OWNER.
2. BRIDGE CRANE SHALL HAVE A ½ TON CAPACITY AND BE ELECTRICALLY OPERATED IN LIFTING DIRECTION WITH A LIFT SPEED OF 15 FEET PER MINUTE. THE AVAILABLE LIFT SHALL BE 20 FEET AND FEATURE AN UPPER LIMIT SWITCH. THE TROLLEY TYPE SHALL BE PUSH/PULL WITH RUBBER BUMPERS AND SAFETY LUGS. CRANE POWER SUPPLY SHALL BE 120 VOLT, SINGLE PHASE, 60 HERTZ. CROSS CONDUCTORS SHALL BE ROUND FESTOONED CABLE. BRIDGE CRANE AND SUPPORT SYSTEM SHALL BE CONNECTED TO METAL BUILDING STRUCTURAL MEMBERS. DESIGN OF BRIDGE CRANE AND SUPPORT SYSTEM BEARING PROFESSIONAL ENGINEER'S SEAL SHALL BE SUBMITTED TO THE ENGINEER FOR APPROVAL.
3. FOOTINGS AND REINFORCEMENT SHOWN FOR INFORMATION ONLY, PLANS AND SPECIFICATIONS BEARING PROFESSIONAL ENGINEER'S STAMP TO BE SUBMITTED TO ENGINEER FOR APPROVAL BASED UPON AN ALLOWABLE SOIL BEARING PRESSURE OF 1,000 POUNDS PER SQUARE FEET.
4. SPLIT AIR CONDITIONING UNITS SHALL BE THREE (3) TON UNIT AS MANUFACTURED BY MITSUBISHI OR APPROVED EQUAL.

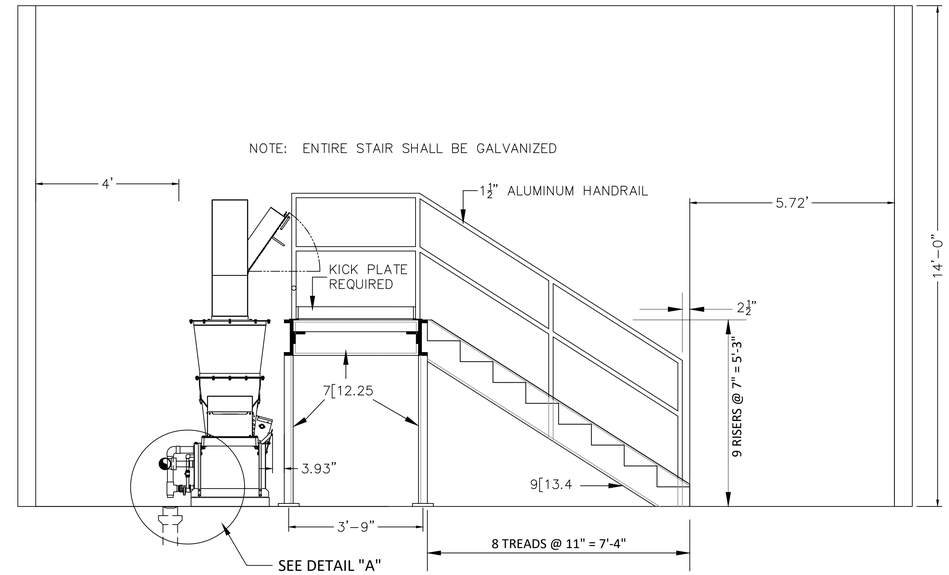

NORTH VIEW - SODA ASH BUILDING

NOT TO SCALE

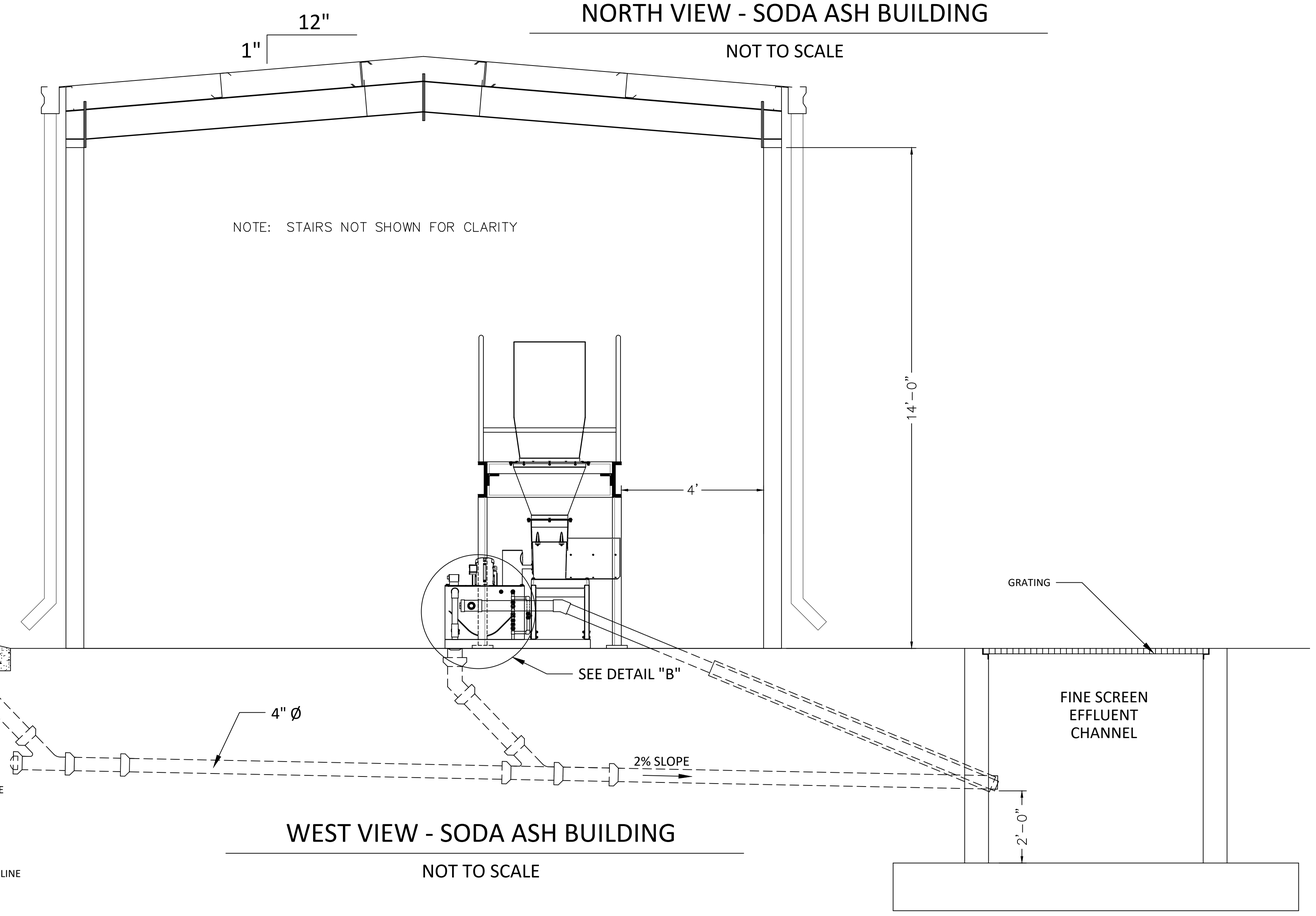

WEST VIEW - SODA ASH BUILDING

NOT TO SCALE

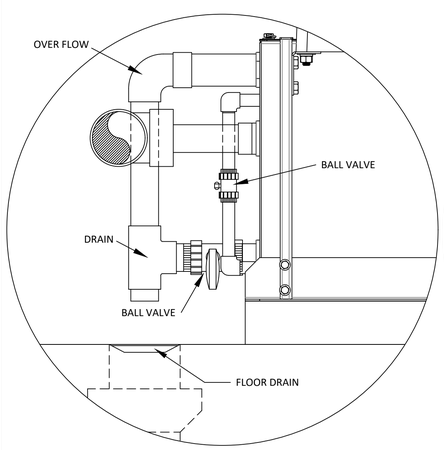

DETAIL "A"

NOT TO SCALE

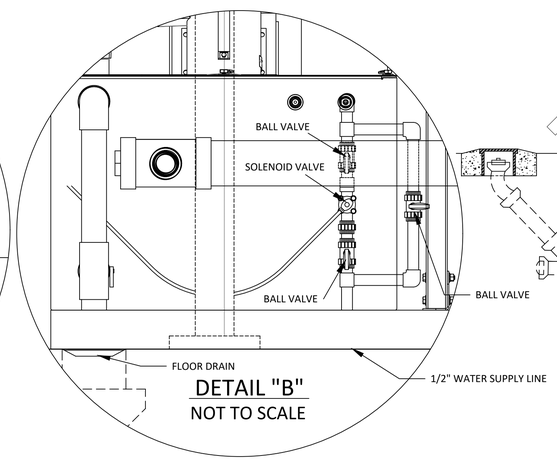

DETAIL "B"

NOT TO SCALE

W. L. BURLE
ENGINEERS, P.A.
111 South Walnut Street
Greenville, MS 38701

GS#323-024 ARPA INFR. - WASTE
CENT. TREATMENT
SOUTH MISSISSIPPI CORRECTIONAL INSTITUTION
LEAKESVILLE, MISSISSIPPI

Burle Proj. No.:	08194-1-0122
File Name:	C-330 PLAN VIEW PH ADJUSTMENT.dwg
Date:	04/29/2024
Scale:	1"=30'
Drawn by:	MJJ/JRG
Checked:	DTM
Revisions:	
Revisions:	
Revisions:	

PLAN VIEW - PH ADJUSTMENT

C-330
Drawing Number

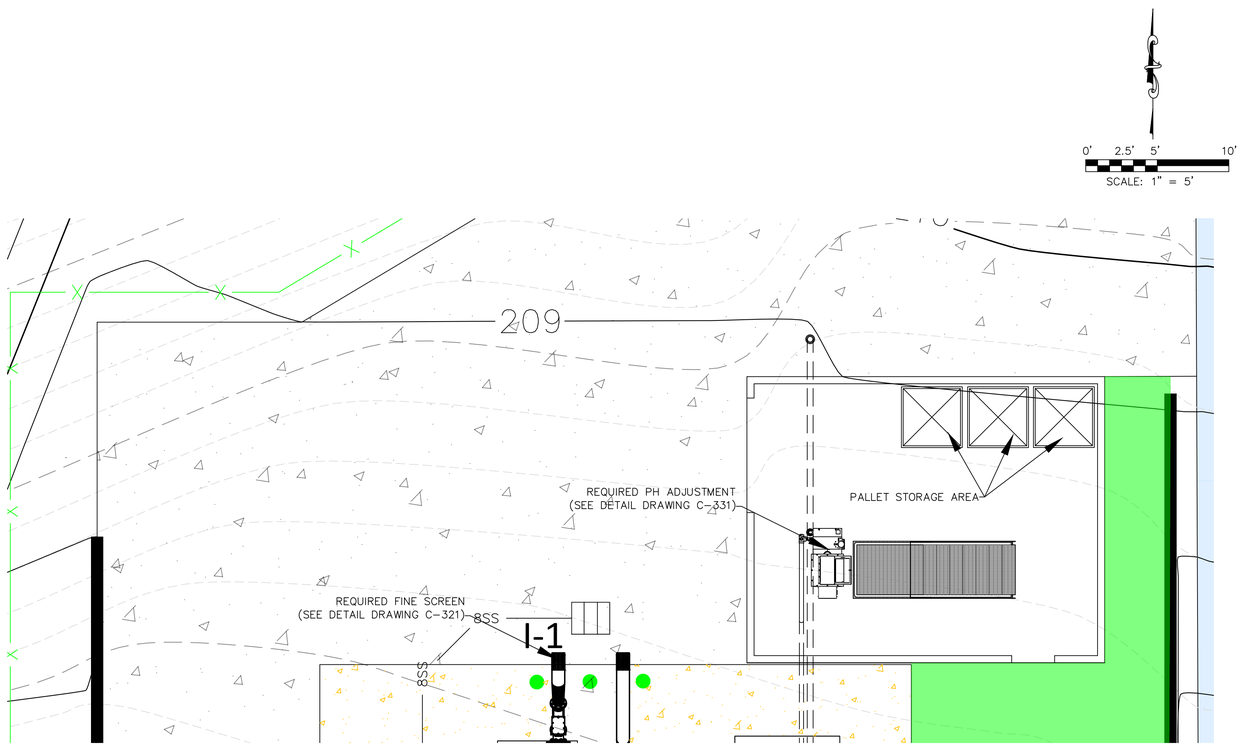

LEGEND:

200	EXISTING MAJOR CONTOURS (FEET)
201	EXISTING MINOR CONTOURS (FEET)
200	REQUIRED MAJOR CONTOURS (FEET)
201	REQUIRED MINOR CONTOURS (FEET)
8SS	REQUIRED 8" STORM SEWER LINE (SEE DETAIL DRAWING C-907)
	REQUIRED 4" CONCRETE (SEE DETAIL DRAWING C-904)
	REQUIRED 8" CONCRETE (SEE DETAIL DRAWING C-904)
	REQUIRED BOLLARD (SEE DRAWING C-904)
I-2	REQUIRED SURFACE INLET (SEE DETAIL DRAWING C-907)

W. L. BURLE
ENGINEERS, P.A.
111 South Walnut Street
Greenville, MS 38701

GS#323-024 ARPA INFR. - WASTE CENT. TREATMENT
SOUTH MISSISSIPPI CORRECTIONAL INSTITUTION
LEAKESVILLE, MS.

Burle Proj. No.: 08194-1-0122

File Name: C-310 PLAN VIEW - PH ADJUSTMENT GRADING.DWG

Date: 04/29/2024

Scale: SHOWN

Drawn by: JRG

Checked: DTM

Revisions:

Revisions:

Revisions:

PLAN VIEW - PH ADJUSTMENT GRADING

C-331
Drawing Number

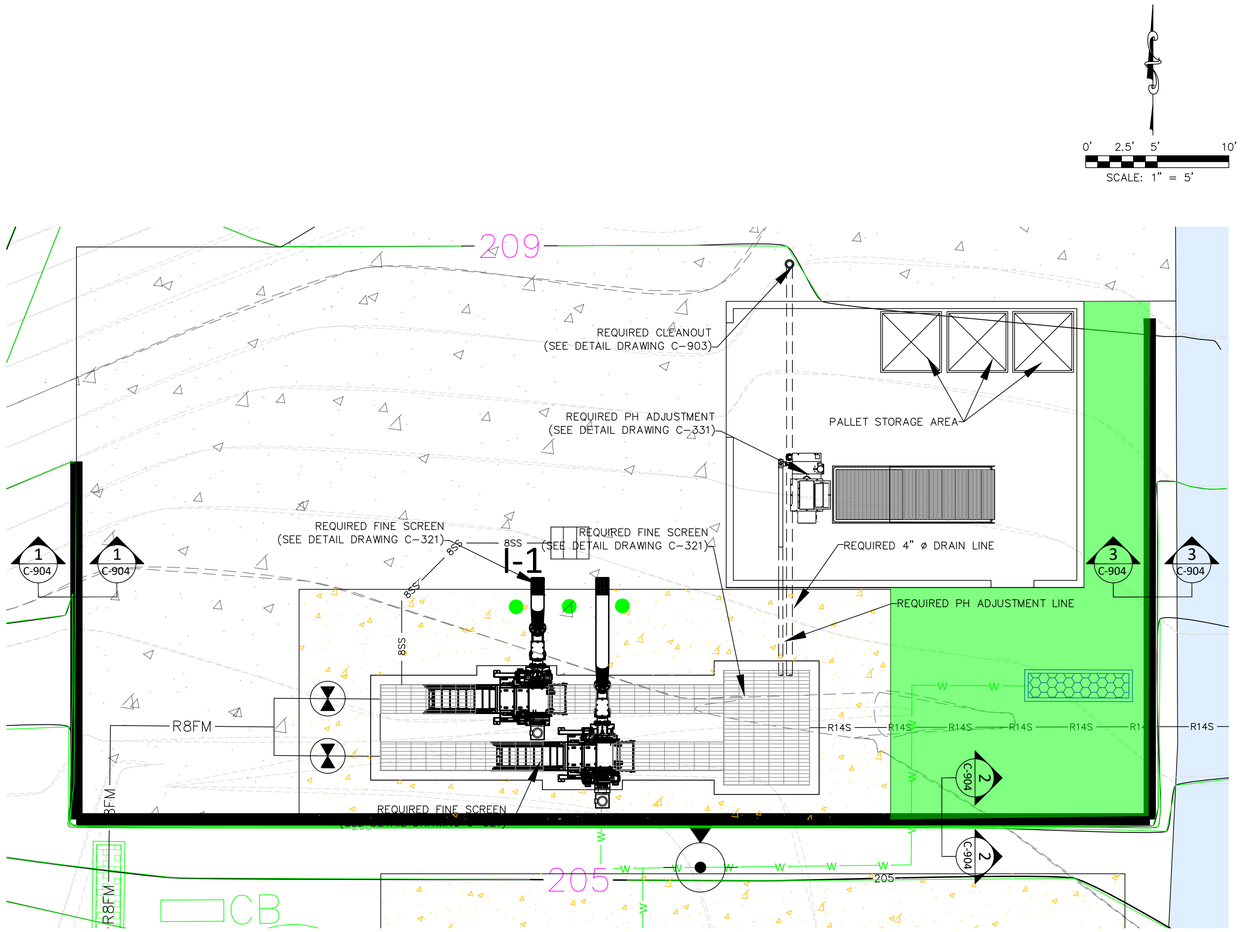

LEGEND:

200	EXISTING MAJOR CONTOURS (FEET)
201	EXISTING MINOR CONTOURS (FEET)
200	REQUIRED MAJOR CONTOURS (FEET)
201	REQUIRED MINOR CONTOURS (FEET)
R14S	REQUIRED 14" GRAVITY SEWER LINE
W	REQUIRED WATER LINE
8SS	REQUIRED 8" STORM SEWER LINE (SEE DETAIL DRAWING C-907)
	REQUIRED 4" CONCRETE (SEE DETAIL DRAWING C-904)
	REQUIRED 8" CONCRETE (SEE DETAIL DRAWING C-904)
	REQUIRED BOLLARD (SEE DRAWING C-904)
I-2	REQUIRED SURFACE INLET (SEE DETAIL DRAWING C-907)

W. L. BURLE
ENGINEERS, P.A.
111 South Walnut Street
Greenville, MS 38701

GS#323-024 ARPA INFR. - WASTE CENT. TREATMENT
SOUTH MISSISSIPPI CORRECTIONAL INSTITUTION
LEAKESVILLE, MS.

Burle Proj. No.: 08194-1-0122

File Name: C-310 PLAN VIEW - PH ADJUSTMENT PIPING.DWG

Date: 04/29/2024

Scale: SHOWN

Drawn by: JRG

Checked: DTM

Revisions:

Revisions:

Revisions:

PLAN VIEW - PH ADJUSTMENT PIPING

C-332
Drawing Number

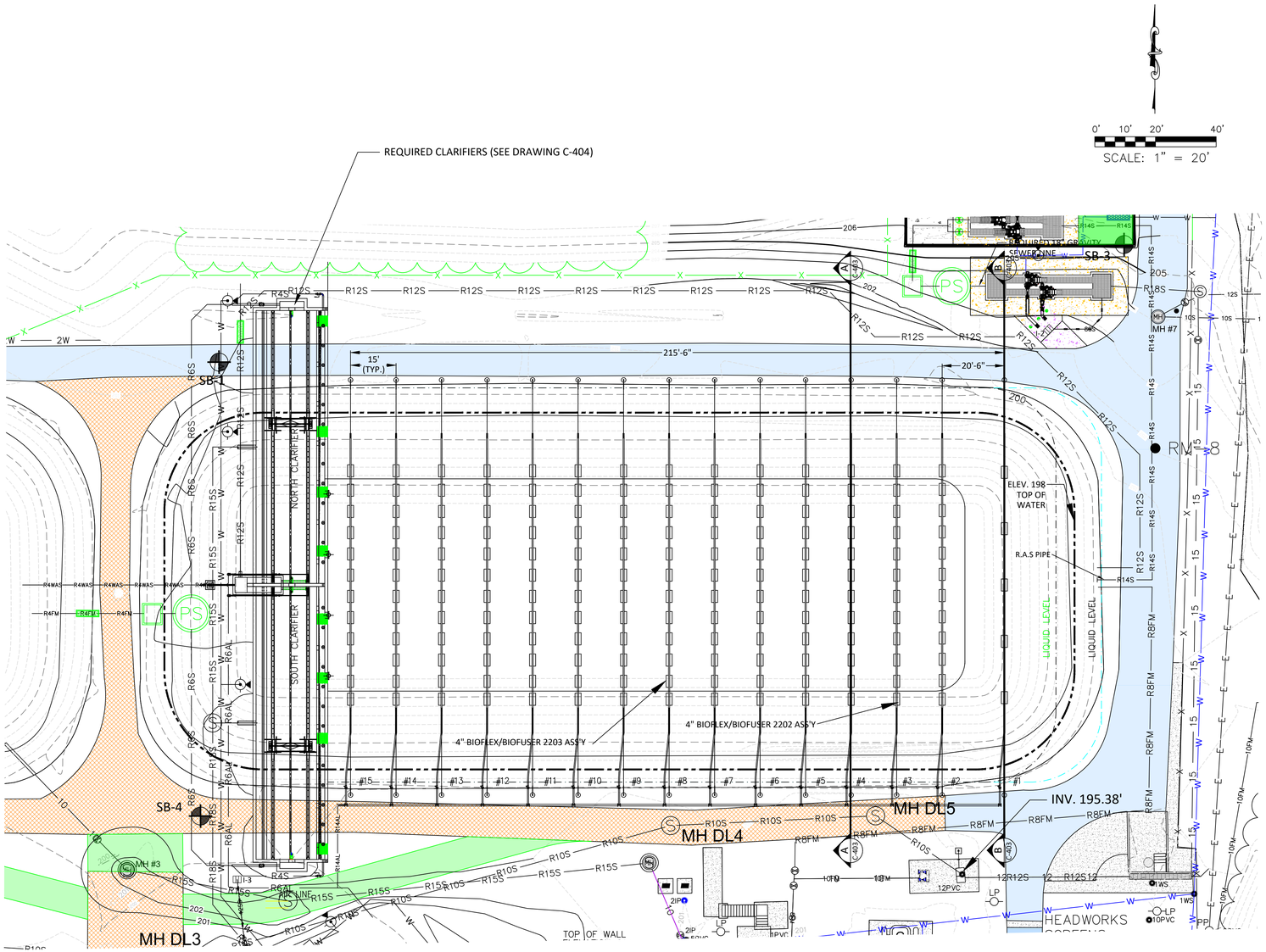

LEGEND:

- EXISTING MAJOR CONTOURS (FEET)
- EXISTING MINOR CONTOURS (FEET)
- REQUIRED MAJOR CONTOURS (FEET)
- REQUIRED MINOR CONTOURS (FEET)
- EXISTING TOP BANK OF DITCH
- EXISTING TOE EDGE OF DITCH
- EXISTING CENTERLINE OF DITCH
- EXISTING OVERHEAD ELECTRIC POWER LINE
- REQUIRED FORCE MAIN (SEE DETAIL DRAWING C-902)
- REQUIRED 14" AIR LINE (SEE DETAIL DRAWING C-902)
- REQUIRED 6" AIR LINE (SEE DETAIL DRAWING C-902)
- EXISTING WATER LINE
- EXISTING CHAIN-LINK FENCE
- REQUIRED 8" GRAVITY SEWER LINE (SEE DETAIL DRAWING C-902)
- REQUIRED 10" GRAVITY SEWER LINE (SEE DETAIL DRAWING C-902)
- REQUIRED 12" GRAVITY SEWER LINE (SEE DETAIL DRAWING C-902)
- REQUIRED 18" GRAVITY SEWER LINE (SEE DETAIL DRAWING C-902)
- REQUIRED 4" WAS LINE (SEE DETAIL DRAWING C-902)
- REQUIRED WATER LINE (SEE DETAIL DRAWING C-902)
- REQUIRED INFLUENT PUMP STATION (SEE DETAIL DRAWING C-311)
- REQUIRED SCUM PUMP STATION (SEE DETAIL DRAWING C-803)
- SOIL BEARING LOCATIONS
- EXISTING LIGHT POLE
- EXISTING MANHOLE
- REQUIRED GRAVEL (SEE DETAIL DRAWING 904)
- EXISTING CONCRETE PAVEMENT
- EXISTING ASPHALT PAVEMENT
- EXISTING GRAVEL AREA
- REQUIRED HYDRANT
- EXISTING TREE LINE TO REMAIN

W.L. BURLE
ENGINEERS, P.A.
111 South Walnut Street
Greenville, MS 38701

GS#323-024 ARPA INFR. - WASTE CENT. TREATMENT
SOUTH MISSISSIPPI CORRECTIONAL INSTITUTION
LEAKESVILLE, MISSISSIPPI

Burle Proj. No.: 08194-1-0122

File Name: C-401 - PLAN VIEW - BIOLOGICAL TREATMENT.dwg

Date: 04/29/2024

Scale: 1"=20'

Drawn by: MJJ/JRG

Checked: DTM

Revisions:

Revisions:

Revisions:

PLAN VIEW - BIOLOGICAL TREATMENT

C-401
Drawing Number

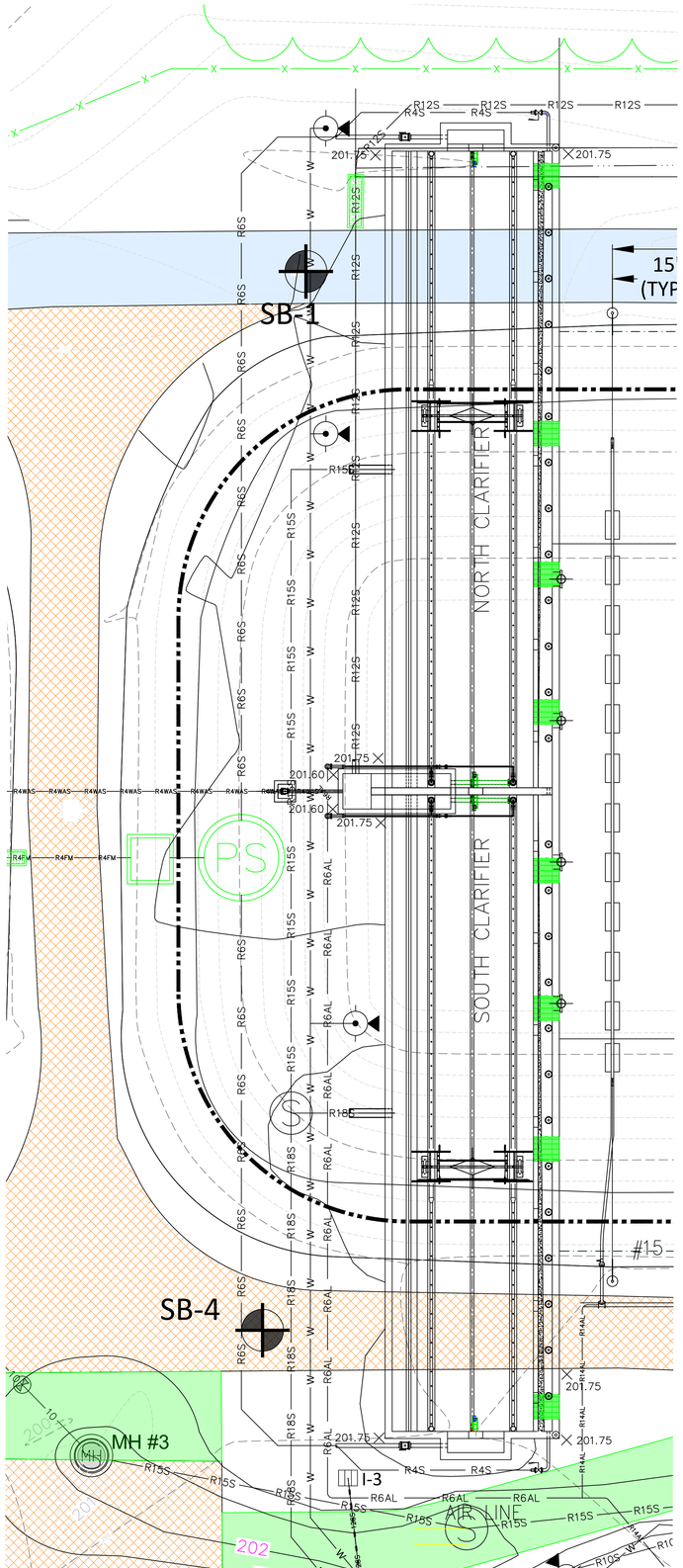

0' 5' 10' 20'

SCALE: 1" = 10'

LEGEND:

- EXISTING MAJOR CONTOURS (FEET)
- EXISTING MINOR CONTOURS (FEET)
- REQUIRED MAJOR CONTOURS (FEET)
- REQUIRED MINOR CONTOURS (FEET)
- EXISTING TOP BANK OF DITCH
- EXISTING TOE EDGE OF DITCH
- EXISTING CENTERLINE OF DITCH
- EXISTING OVERHEAD ELECTRIC POWER LINE
- REQUIRED FORCE MAIN (SEE DETAIL DRAWING C-902)
- REQUIRED 14" AIR LINE (SEE DETAIL DRAWING C-902)
- REQUIRED 6" AIR LINE (SEE DETAIL DRAWING C-902)
- EXISTING WATER LINE
- EXISTING CHAIN-LINK FENCE
- REQUIRED 8" GRAVITY SEWER LINE (SEE DETAIL DRAWING C-902)
- REQUIRED 10" GRAVITY SEWER LINE (SEE DETAIL DRAWING C-902)
- REQUIRED 12" GRAVITY SEWER LINE (SEE DETAIL DRAWING C-902)
- REQUIRED 18" GRAVITY SEWER LINE (SEE DETAIL DRAWING C-902)
- REQUIRED 4" WAS LINE (SEE DETAIL DRAWING C-902)
- REQUIRED WATER LINE (SEE DETAIL DRAWING C-902)
- REQUIRED INFLUENT PUMP STATION (SEE DETAIL DRAWING C-311)
- REQUIRED SCUM PUMP STATION (SEE DETAIL DRAWING C-803)
- SOIL BEARING LOCATIONS
- EXISTING LIGHT POLE
- EXISTING MANHOLE
- REQUIRED GRAVEL (SEE DETAIL DRAWING 904)
- EXISTING CONCRETE PAVEMENT
- EXISTING ASPHALT PAVEMENT
- EXISTING GRAVEL AREA
- REQUIRED HYDRANT
- EXISTING TREE LINE TO REMAIN
- 199.4 SPOT ELEVATION

W. L. BURLE
ENGINEERS, P.A.
111 South Walnut Street
Greenville, MS 38701

GS#323-024 ARPA INFR. - WASTE CENT. TREATMENT
SOUTH MISSISSIPPI CORRECTIONAL INSTITUTION
LEAKESVILLE, MISSISSIPPI

Burle Proj. No.: 08194-1-0122

File Name: C-401 - PLAN VIEW - BIOLOGICAL TREATMENT REQUIRED GRADING.dwg

Date: 04/29/2024

Scale: 1"=10'

Drawn by: MJJ/JRG

Checked: DTM

Revisions:

Revisions:

Revisions:

PLAN VIEW - REQUIRED CLARIFIER GRADING

C-402
Drawing Number

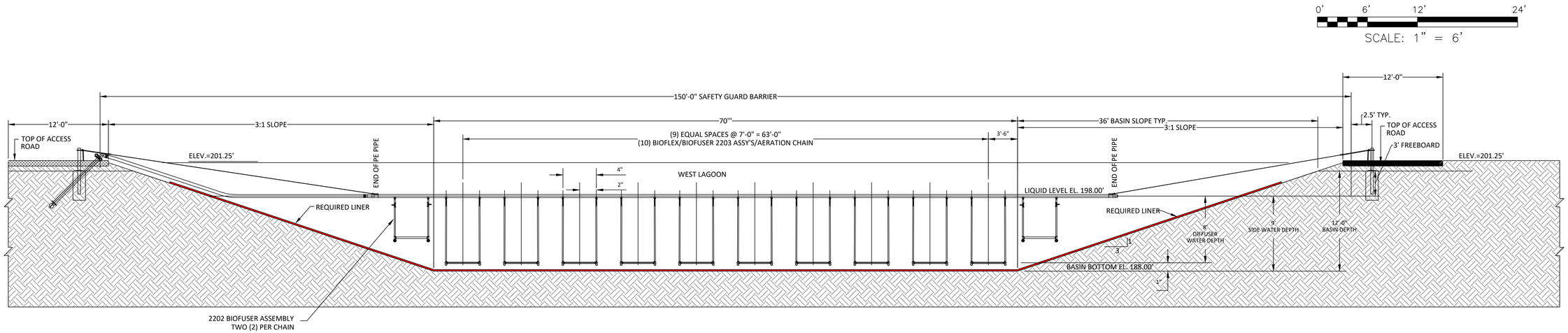

A / C-403 SECTION - REQUIRED WORK EAST LAGOON

SCALE: 1"=10'-0"

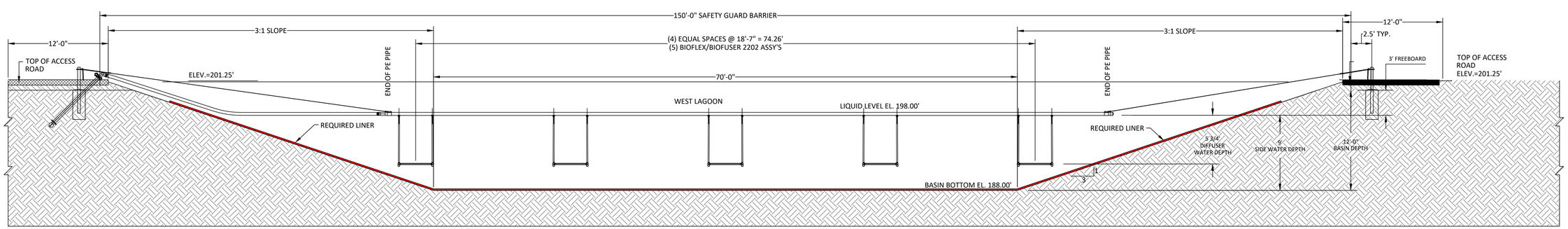

B / C-403 SECTION - REQUIRED WORK EAST LAGOON

SCALE: 1"=10'-0"

W. L. BURLE
ENGINEERS, P.A.
111 South Walnut Street
Greenville, MS 38701

GS#323-024 ARPA INFR. - WASTE CENT. TREATMENT
SOUTH MISSISSIPPI CORRECTIONAL INSTITUTION
LEAKESVILLE, MISSISSIPPI

Burle Proj. No.: 08194-1-0122

File Name: C-403 SECTIONS-REQUIRED WORK WEST LAGOON.dwg

Date: 04/29/2024

Scale: 1"=6'

Drawn by: MJJ/JRG

Checked: DTM

Revisions:

Revisions:

Revisions:

SECTIONS- REQUIRED WORK EAST LAGOON

C-403
Drawing Number

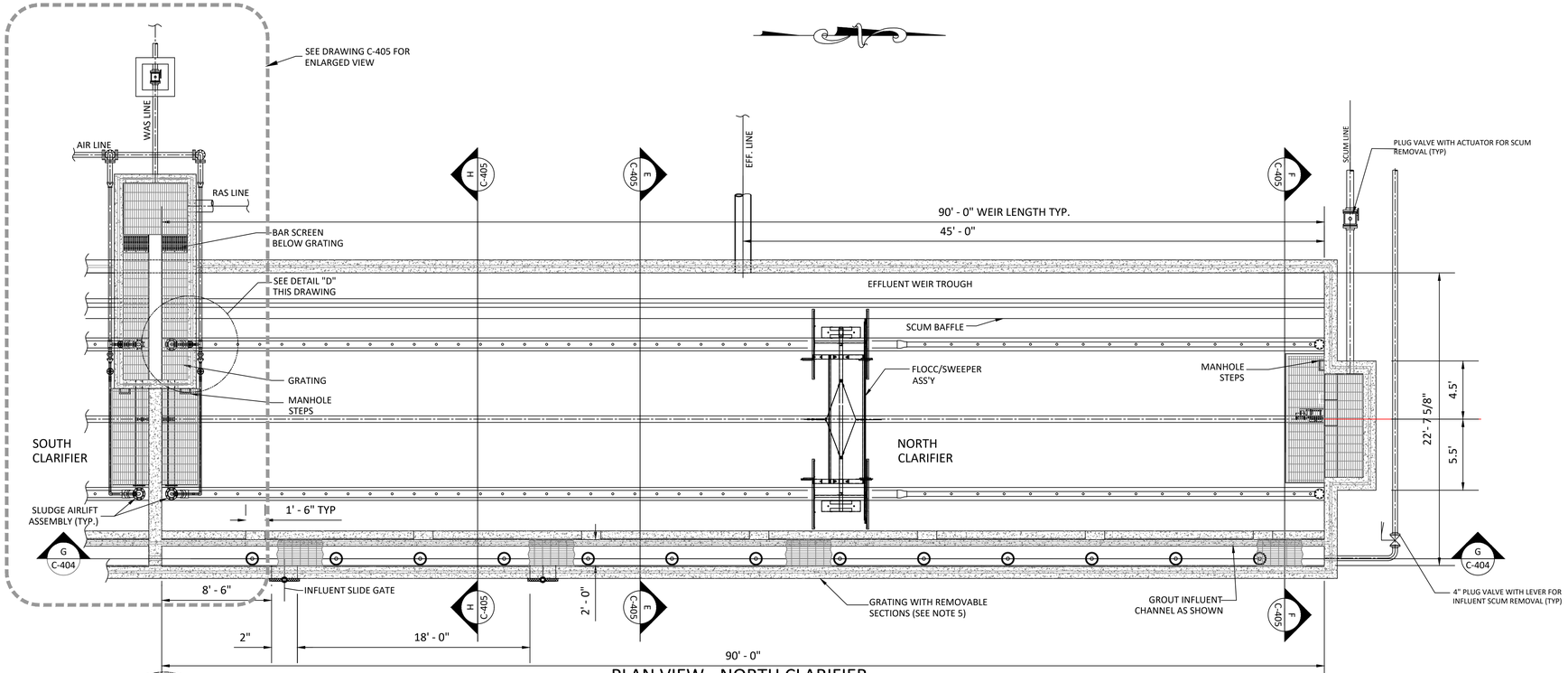

PLAN VIEW - NORTH CLARIFIER

SCALE: 1"=5'

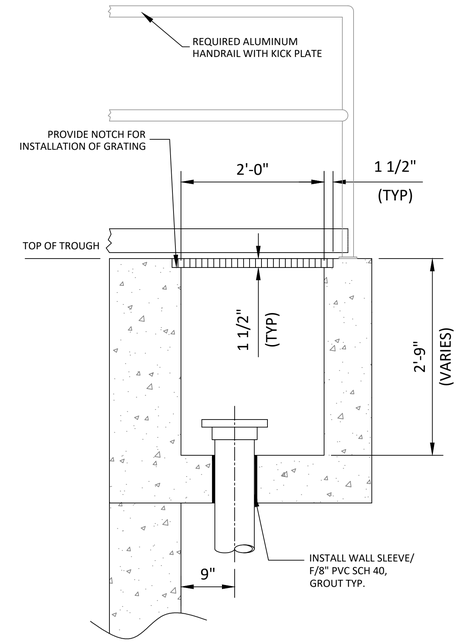

DETAIL-"D"

SCALE: 1"=1'

NOTE: AIR PIPING NOT SHOWN FOR CLARITY.

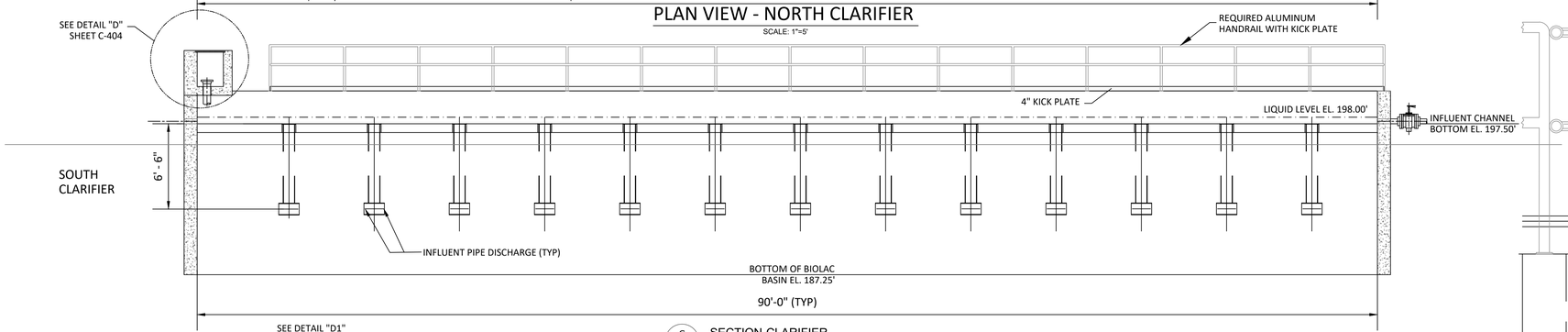

G C-404 SECTION-CLARIFIER

SCALE: 1"=5'

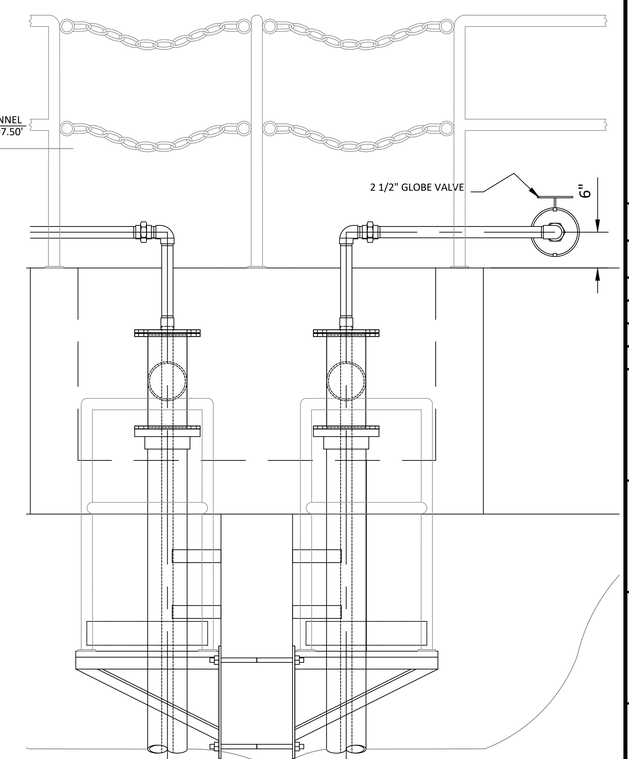

DETAIL-"D1"

SCALE: 1"=1'

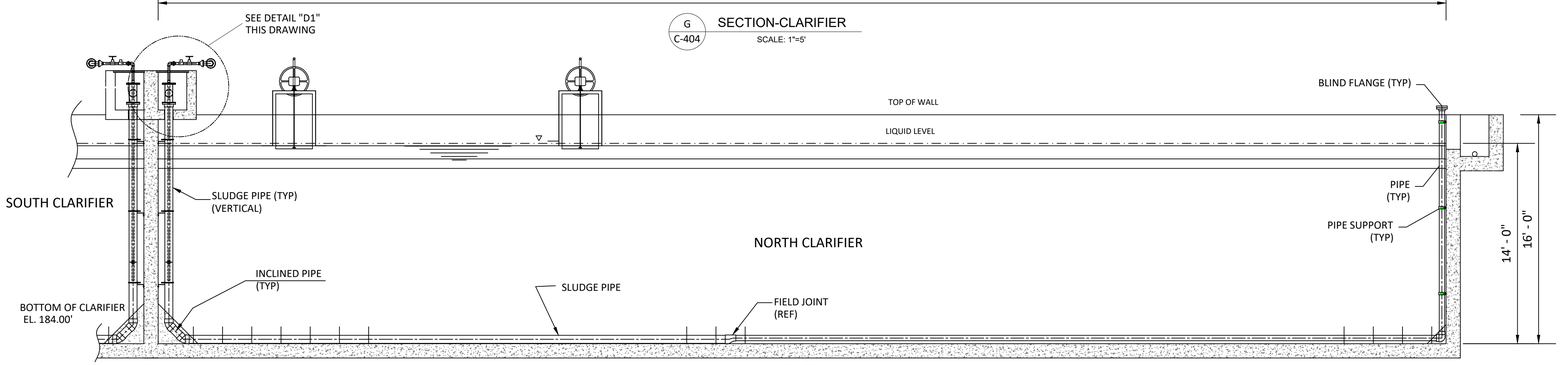

ELEVATION

HANDRAILS, PLATFORMS, SKIMMER & WEIR OMITTED FOR CLARITY

SCALE: 1"=5'

W. L. BURLE
ENGINEERS, P.A.
111 South Walnut Street
Greenville, MS 38701

GS#323-024 ARPA INFR. - WASTE CENT. TREATMENT
SOUTH MISSISSIPPI CORRECTIONAL INSTITUTION
LEAKESVILLE, MISSISSIPPI

Burle Proj. No.: 08194-1-0122

File Name: C-404.dwg

Date: 04/29/2024

Scale: AS SHOWN

Drawn by: MJJ/JRG

Checked: DTM

Revisions:

Revisions:

Revisions:

REQUIRED CLARIFIERS

C-404

Drawing Number

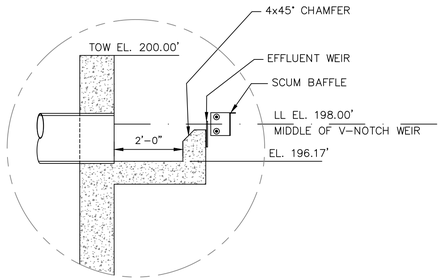

DETAIL "E1"
SCALE: 1"=2'

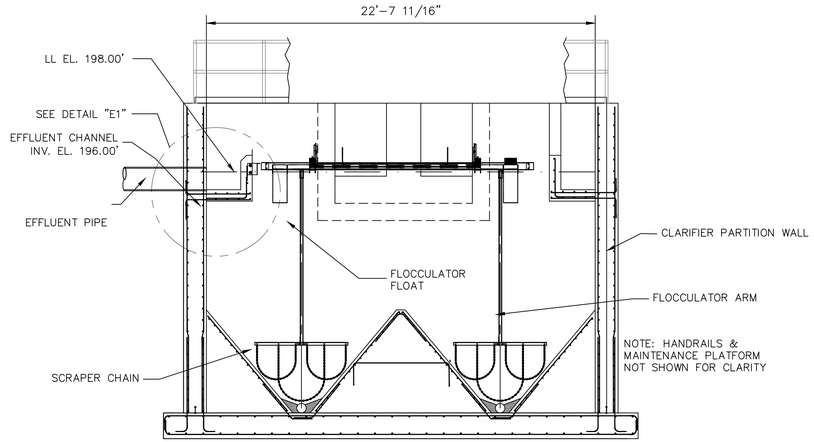

E
C-405
SECTION-CLARIFIER
SCALE: 1"=4'

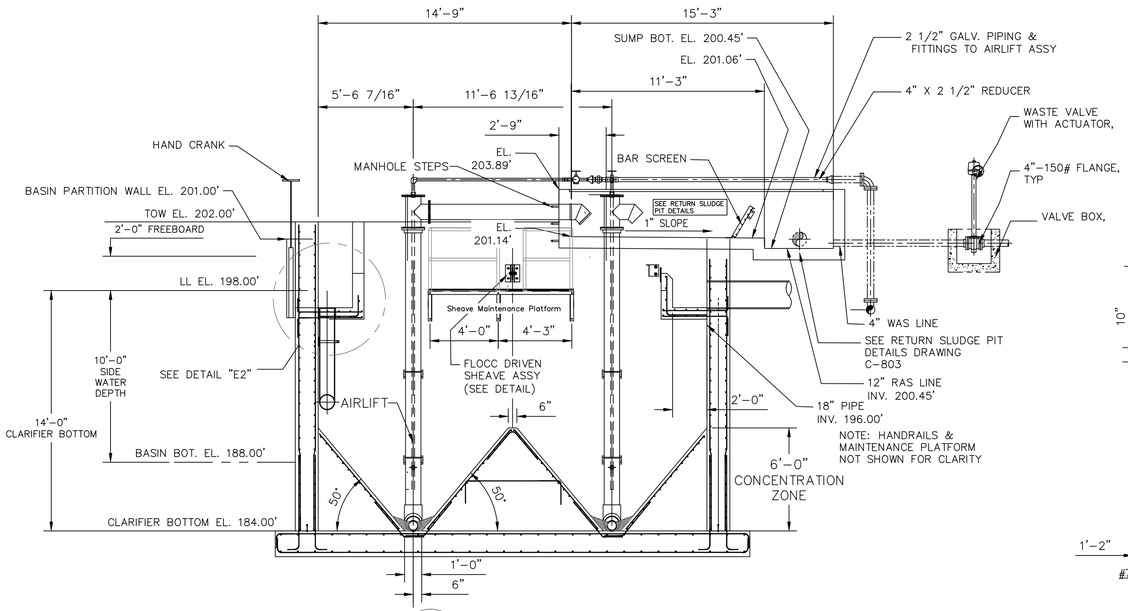

H
C-405
SECTION-CLARIFIER
SCALE: 1"=4'

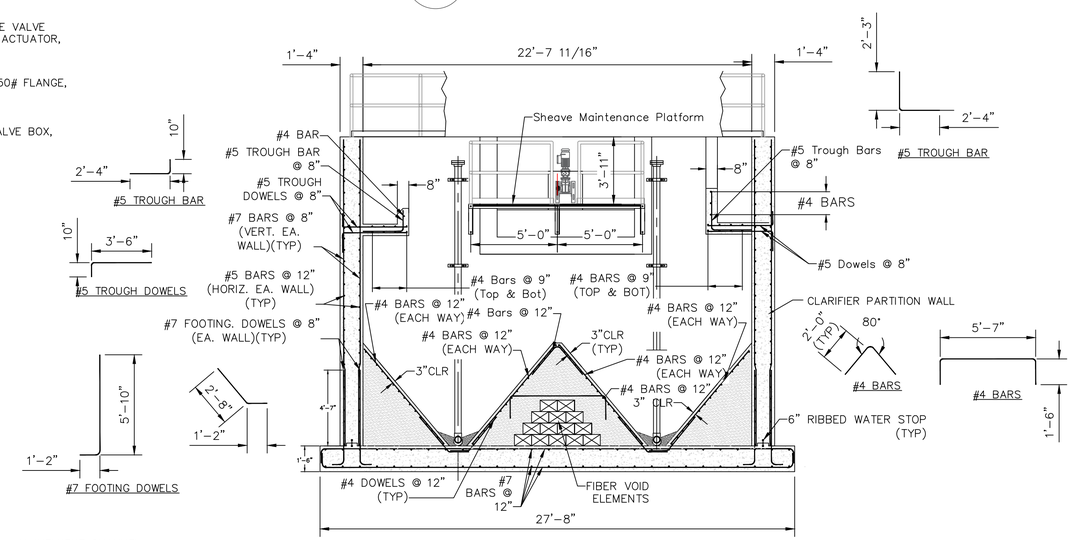

F
C-304
SECTION-CLARIFIER
SCALE: 1"=4'

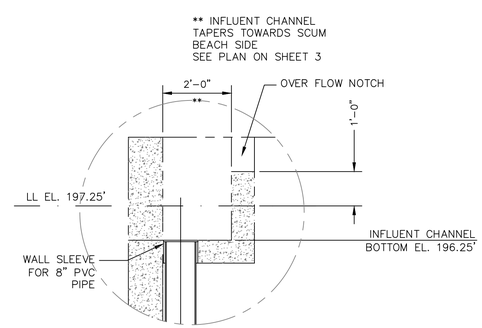

DETAIL "E2"
SCALE: 1"=2'

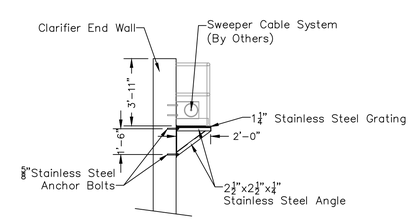

Sheave Maintenance Platform Detail
(Typ. Each End of Clarifier)

W. L. BURLE
ENGINEERS, P.A.
111 South Walnut Street
Greenville, MS 38701

GS#323-024 ARPA INFR. - WASTE
CENT. TREATMENT
SOUTH MISSISSIPPI CORRECTIONAL INSTITUTION
LEAKESVILLE, MISSISSIPPI

Burle Proj. No.:	08194-1-0122
File Name:	C-404 SECTIONS CLARIFIER.dwg
Date:	04/29/2024
Scale:	AS SHOWN
Drawn by:	MJJ
Checked:	DTM
Revisions:	
Revisions:	
Revisions:	

SECTIONS - CLARIFIERS

C-405
Drawing Number

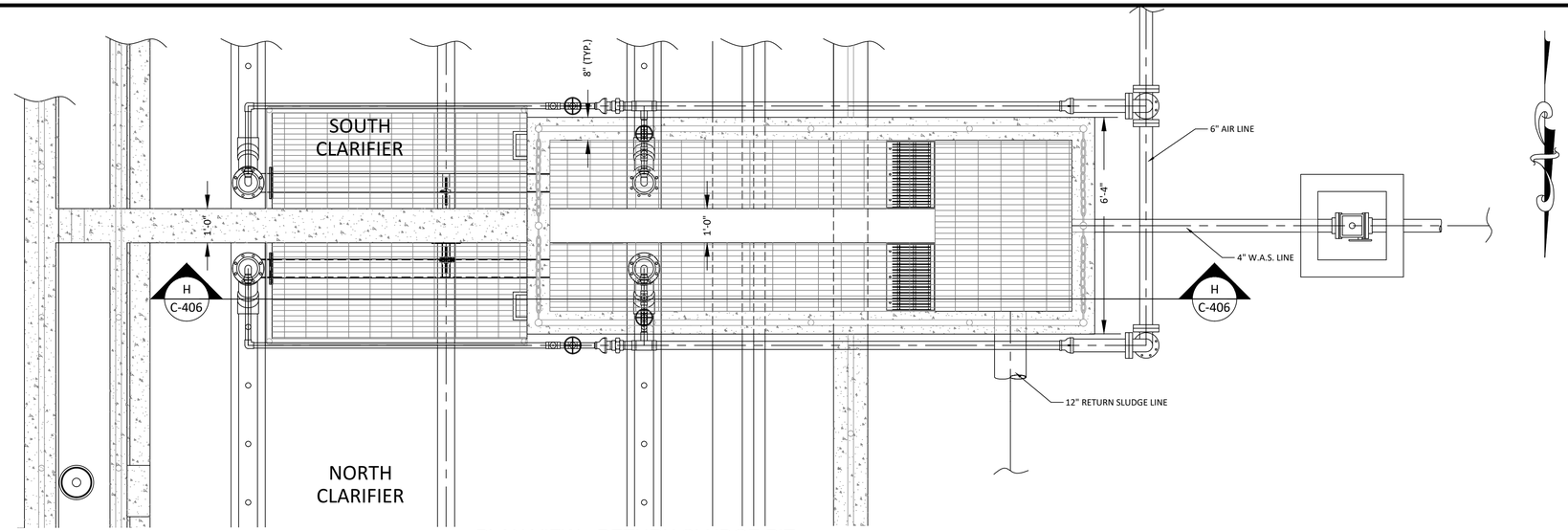

PLAN VIEW - RETURN SLUDGE PIT
N.T.S.

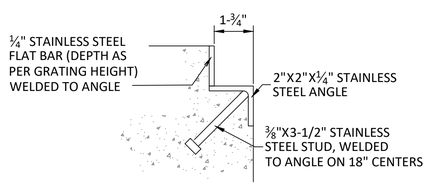

1 C-406 GRATING FRAME DETAIL
N.T.S.

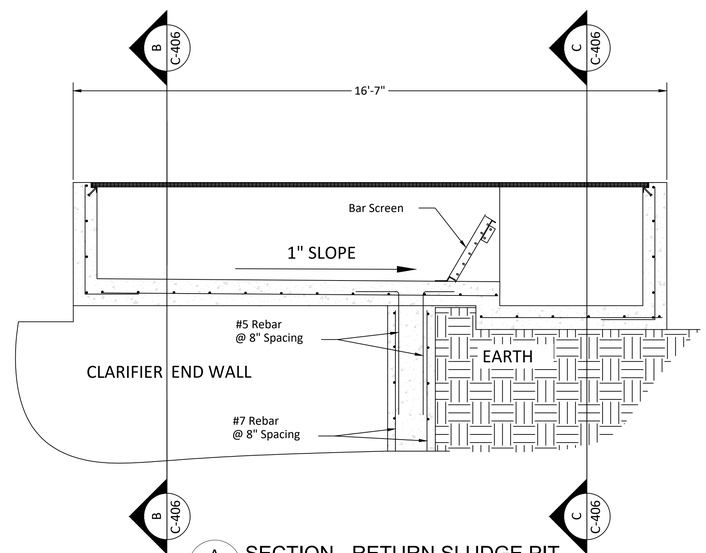

A C-406 SECTION - RETURN SLUDGE PIT
N.T.S.

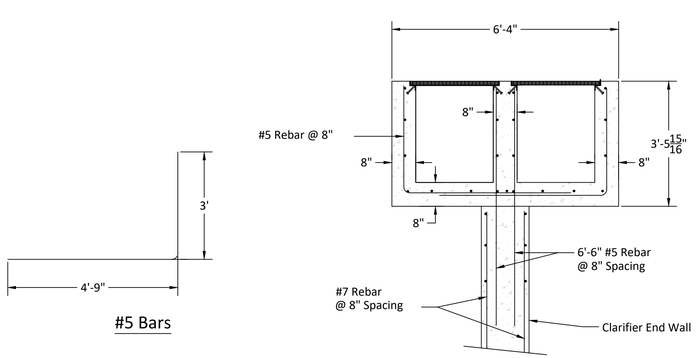

B C-406 SECTION - RETURN SLUDGE PIT
N.T.S.

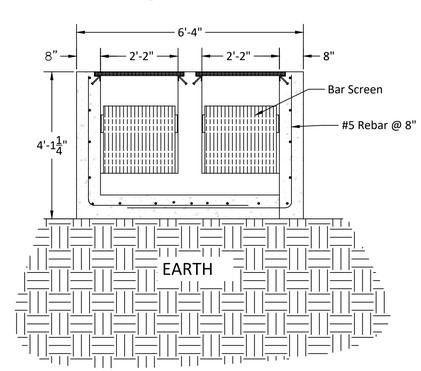

C C-406 SECTION - RETURN SLUDGE PIT
N.T.S.

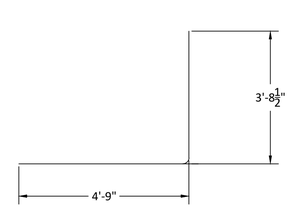

#5 Bars

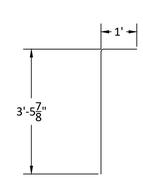

#5 Bars

W. L. BURLE
ENGINEERS, P.A.
111 South Walnut Street
Greenville, MS 38701

DANIEL THOMAS MARTINEK
STATE OF MISSISSIPPI
04/29/24

GS#323-024 ARPA INFR. - WASTE CENT. TREATMENT
SOUTH MISSISSIPPI CORRECTIONAL INSTITUTION
LEAKESVILLE, MISSISSIPPI

Burle Proj. No.: 08194-1-0122
File Name: C-406 - PLAN VIEW - BILOGICAL TREATMENT.dwg
Date: 04/29/2024
Scale: 1"=1'-0"
Drawn by: MJJ/JRG
Checked: DTM
Revisions:
Revisions:
Revisions:

PLAN VIEW - RETURN SLUDGE PIT

C-406
Drawing Number

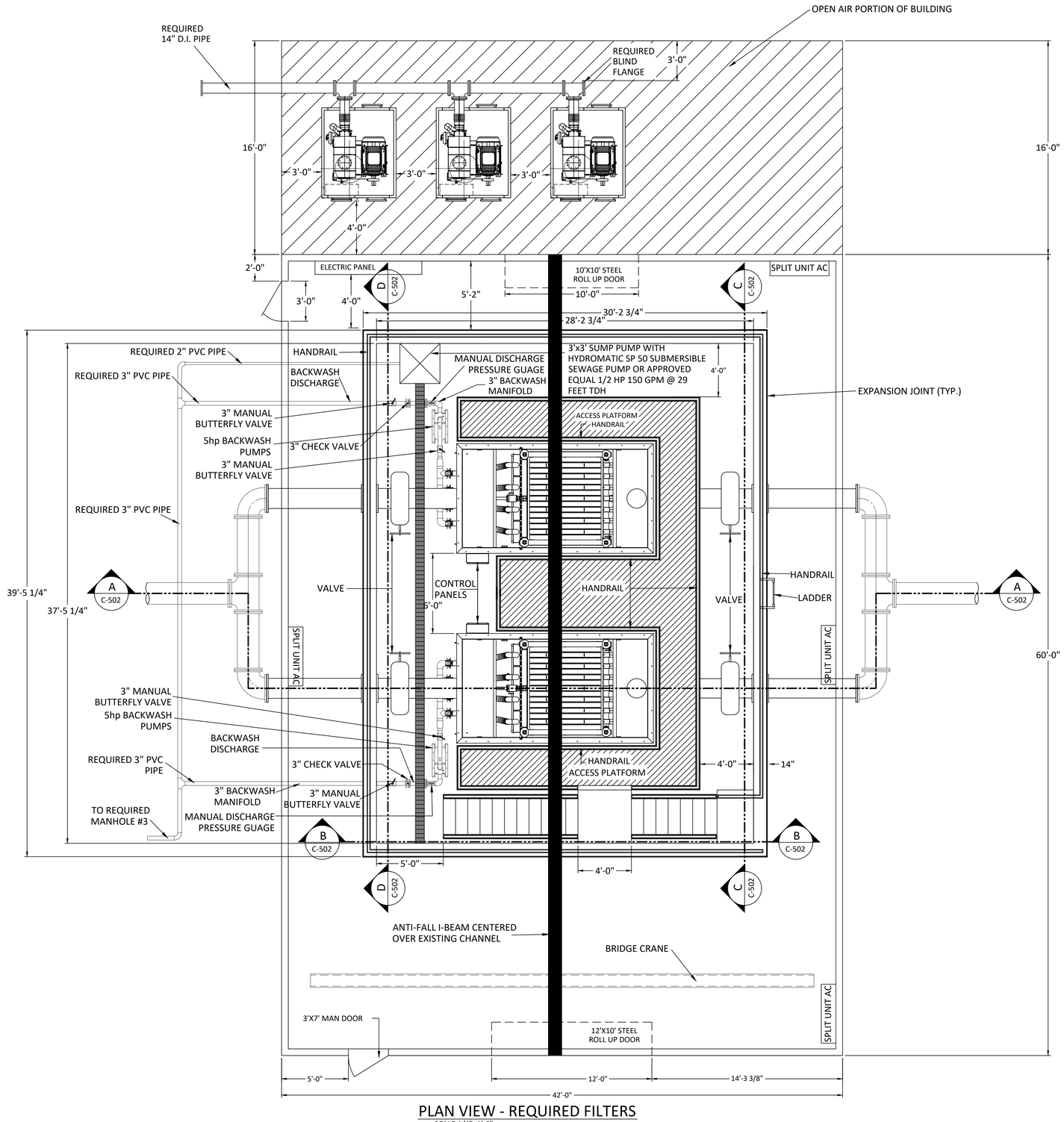

PLAN VIEW - REQUIRED FILTERS

SCALE:1/4"=1'-0"

NOTES:

1. ENCLOSED METAL BUILDING SHALL BE PRE-ENGINEERED, METAL FRAMED STRUCTURE. PLANS AND SPECIFICATIONS BEARING PROFESSIONAL ENGINEERS'S SEAL SHALL BE SUBMITTED TO THE ENGINEER FOR APPROVAL. COLOR OF METAL BUILDING EXTERIOR SHEETS SHALL BE SELECTED BY THE OWNER.
2. ROLL UP STEEL DOORS SHALL BE RAYNOR DURACOIL MODEL FF DOORS WITH MANUAL OPENERS OR APPROVED EQUAL. COLOR OF DOORS SHALL BE SELECTED BY THE OWNER.
3. BRIDGE CRANE SHALL HAVE A $\frac{1}{2}$ TON CAPACITY AND BE ELECTRICALLY OPERATED IN LIFTING DIRECTION WITH A LIFT SPEED OF 15 FEET PER MINUTE. THE AVAILABLE LIFT SHALL BE 20 FEET AND FEATURE AN UPPER LIMIT SWITCH. THE TROLLEY TYPE SHALL BE ELECTRICALLY OPERATED PULL WITH RUBBER BUMPERS AND SAFETY LUGS. CRANE POWER SUPPLY SHALL BE 120 VOLT, SINGLE PHASE, 60 HERTZ. CROSS CONDUCTORS SHALL BE ROUND FESTOONED CABLE. BRIDGE CRANE AND SUPPORT SYSTEM SHALL BE CONNECTED TO METAL BUILDING STRUCTURAL MEMBERS. DESIGN OF BRIDGE CRANE AND SUPPORT SYSTEM BEARING PROFESSIONAL ENGINEER'S SEAL SHALL BE SUBMITTED TO THE ENGINEER FOR APPROVAL.
4. FOOTINGS AND REINFORCEMENT SHOWN FOR INFORMATION ONLY, PLANS AND SPECIFICATIONS BEARING PROFESSIONAL ENGINEER'S STAMP TO BE SUBMITTED TO ENGINEER FOR APPROVAL BASED UPON AN ALLOWABLE SOIL BEARING PRESSURE OF 1,000 POUNDS PER SQUARE FEET.
5.. SPLIT AIR CONDITIONING UNITS SHALL BE THREE (3) TON UNIT AS MANUFACTURED BY MITSUBISHI OR APPROVED EQUAL.

W. L. BURLE
ENGINEERS, P.A.
111 South Walnut Street
Greenville, MS 38701

THOMAS MARTIN PRESTON
LICENSED PROFESSIONAL ENGINEER
LICENSE NO. 15745
STATE OF MISSISSIPPI
2024/12/4

GS#323-024 ARPA INFR. - WASTE CENT. TREATMENT
SOUTH MISSISSIPPI CORRECTIONAL INSTITUTE
LEAKESVILLE, MS.

Burle Proj. No.:	08194-1-0122
File Name:	C-502 FILTERS.dwg
Date:	04/29/2024
Scale:	SHOWN
Drawn by:	JRG
Checked:	DTM
Revisions:	
Revisions:	
Revisions:	

PLAN VIEW - FILTERS

C-501
Drawing Number

NOTES:

1. CONTRACTOR SHALL DESIGN AND PROVIDE OVERHEAD FALL PROTECTION THAT MEETS OCCUPATIONAL SAFETY AND HEALTH ADMINISTRATION STANDARDS.
2. CONTRACTOR SHALL PROVIDE TWO (2) OF THE FOLLOWING FALL PREVENTION DEVISES:
   A. STAINLESS STEEL ANTI-FALL STANCHION;
   B. STAINLESS STEEL SELF RETRACTING LIFE LINE;
   C. SAFETY RETRIEVAL STATIC LINE; AND
   D. BACK D-RING HARNESS;

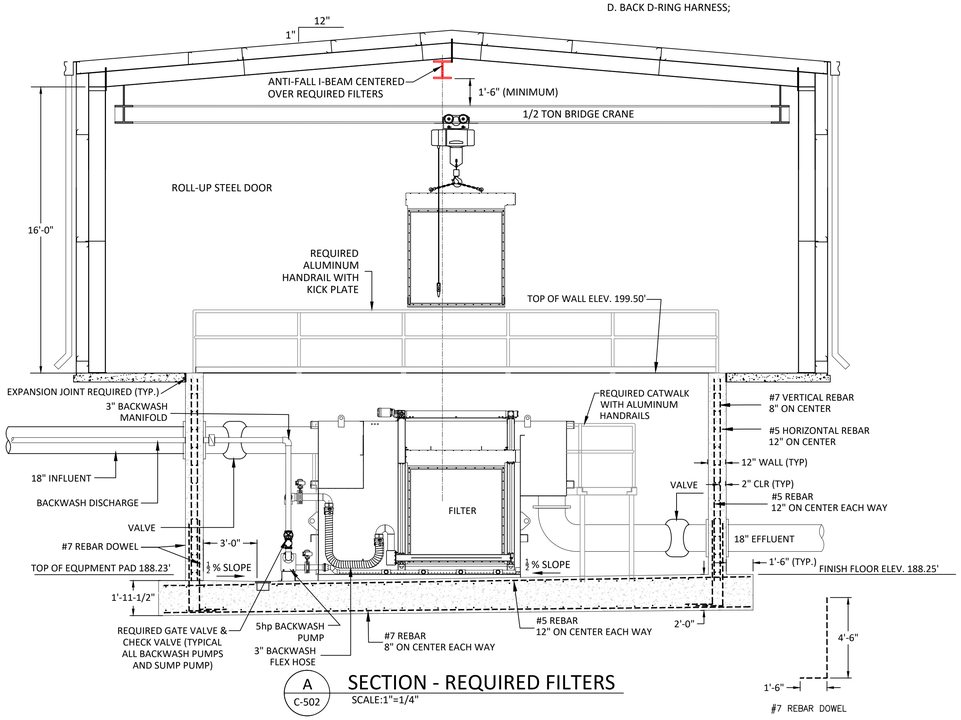

A C-502 SECTION - REQUIRED FILTERS
SCALE:1"=1/4"

NOTE: BUILDING NOT SHOWN FOR CLARITY

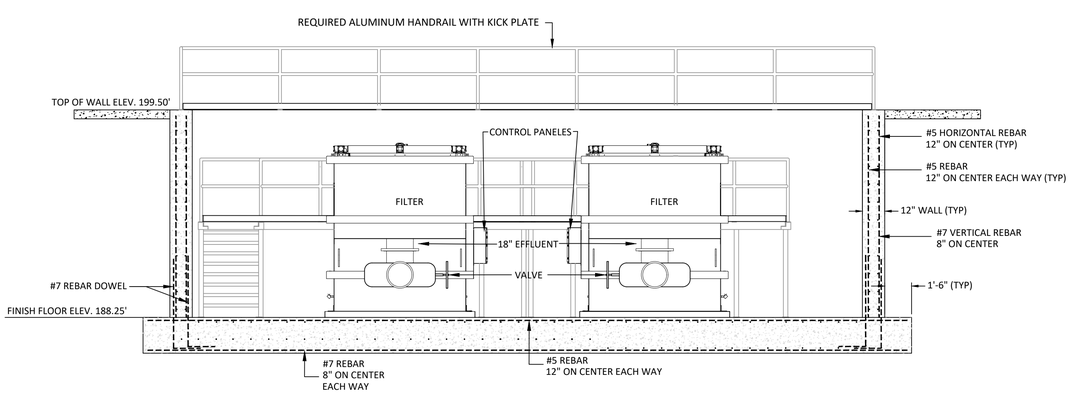

B C-502 SECTION - REQUIRED FILTERS
SCALE:1"=1/4"

NOTE: EQUIPMENT AND STAIRS NOT SHOWN FOR CLARITY

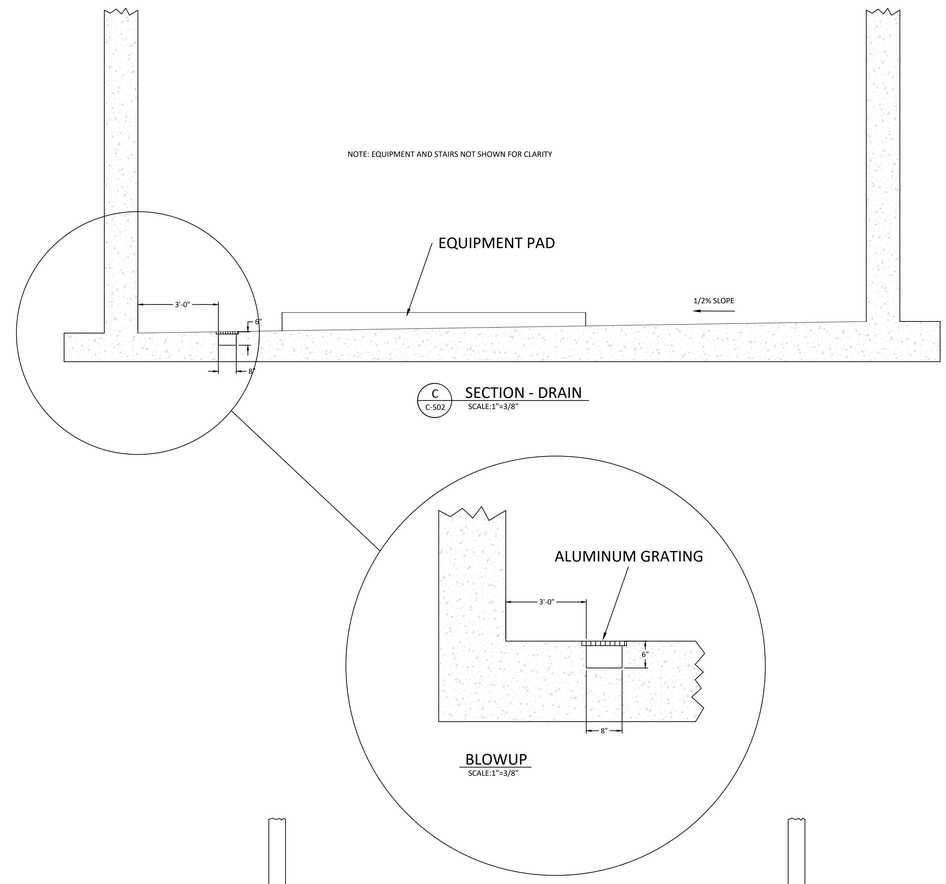

C C-502 SECTION - DRAIN
SCALE:1"=3/8"

BLOWUP
SCALE:1"=3/8"

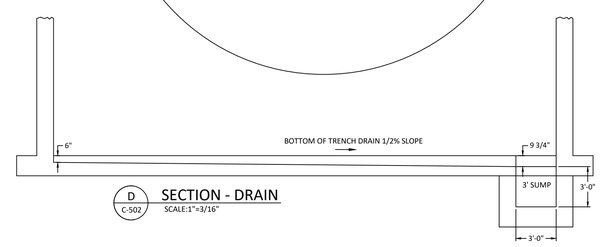

D C-502 SECTION - DRAIN
SCALE:1"=3/16"

W. L. BURLE
ENGINEERS, P.A.
111 South Walnut Street
Greenville, MS 38701

GS#323-024 ARPA INFR. - WASTE CENT. TREATMENT
SOUTH MISSISSIPPI CORRECTIONAL INSTITUTION
LEAKESVILLE, MS.

Burle Proj. No.: 08194-1-0122
File Name: C-502 FILTERS.dwg
Date: 04/29/2024
Scale: SHOWN
Drawn by: JRG
Checked: DTM
Revisions:
Revisions:
Revisions:

SECTION - FILTERS

C-502
Drawing Number

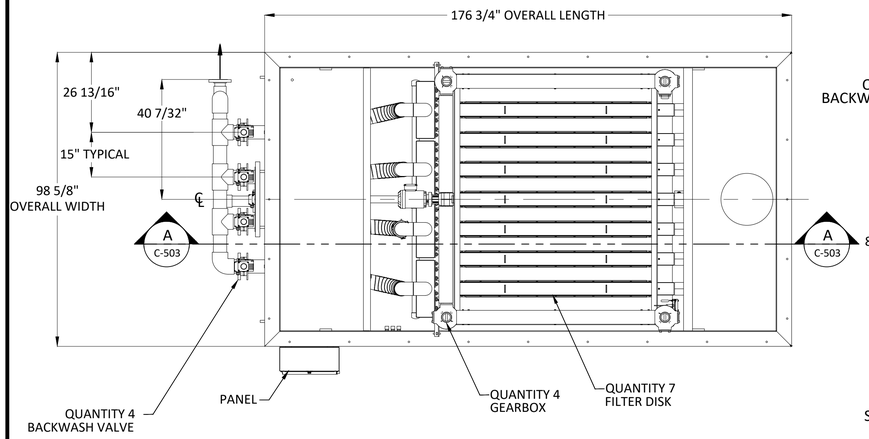

PLAN VIEW - REQUIRED FILTERS
SCALE: 1/2"=1'-0"

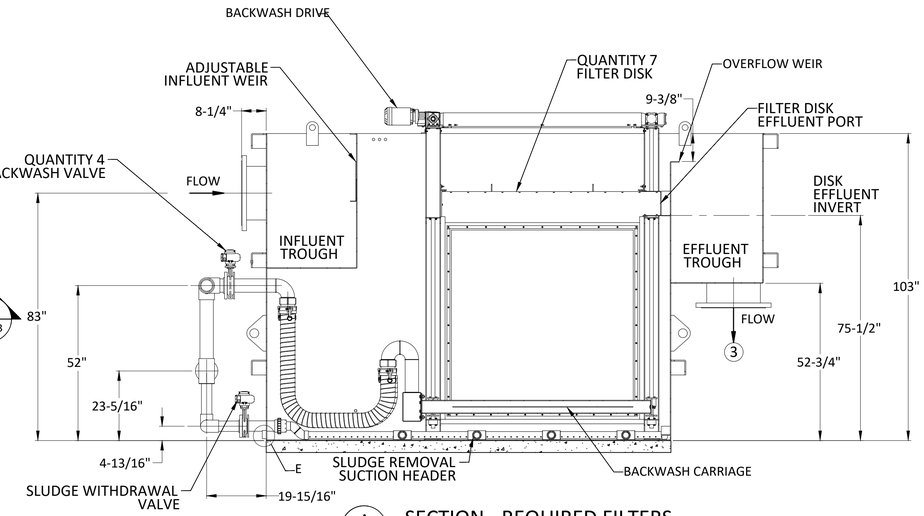

A C-503 SECTION - REQUIRED FILTERS
SCALE: 1/2"=1-0"

Connections			
Ref. No.	Port Description	Size	Type
1	Influent	18"	150#
2	Backwash\Sludge Withdrawl	3"	150#
3	Effluent	18"	150#
4	Tank Drain	2" NB	NPT

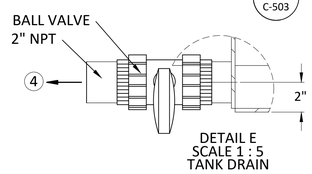

DETAIL E
SCALE 1 : 5
TANK DRAIN

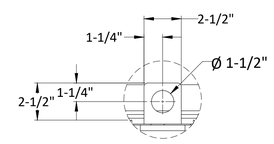

DETAIL C
SCALE 1 : 5
DISK LIFTING LUG

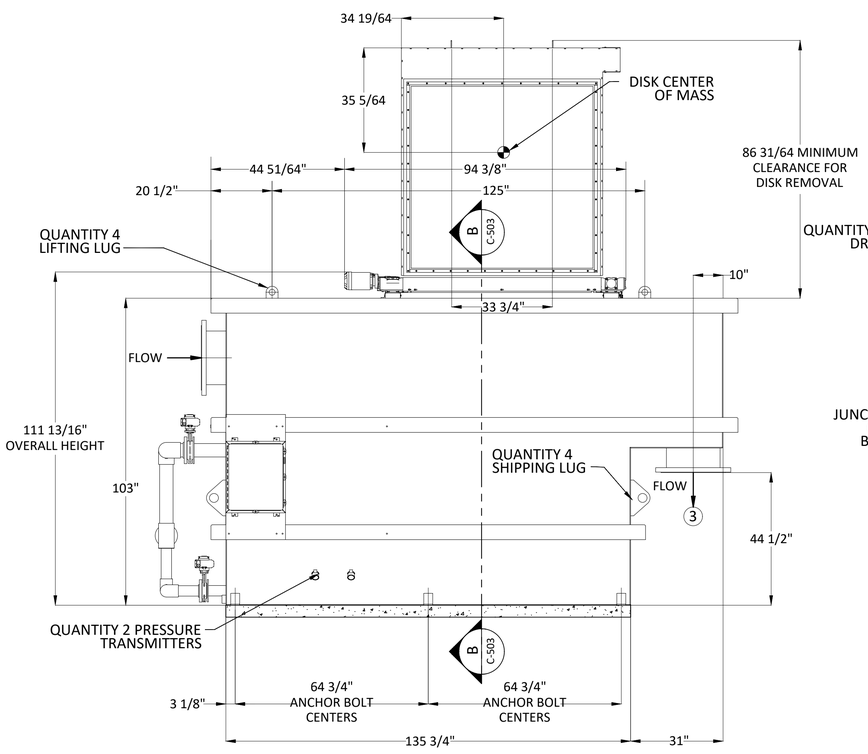

ELEVATION - REQUIRED FILTERS
SCALE: 1/2"=1'-0"

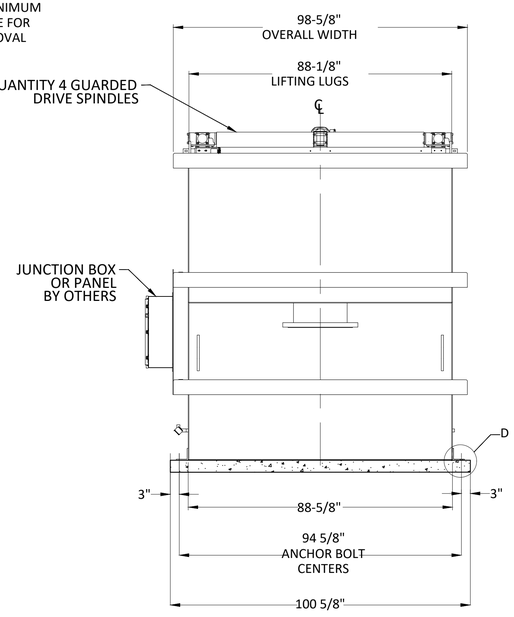

ELEVATION - REQUIRED FILTERS
SCALE: 1/2"=1'-0"

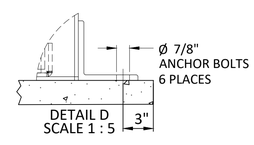

DETAIL D
SCALE 1 : 5

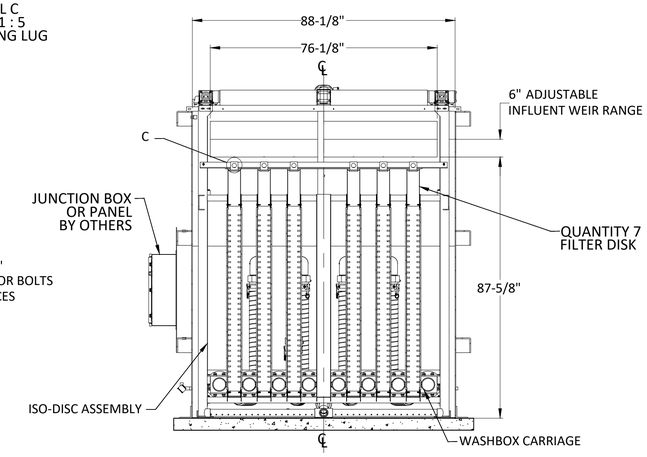

B C-503 SECTION - REQUIRED FILTERS
SCALE: 1/2"=1-0"

W. L. BURLE
ENGINEERS, P.A.
111 South Walnut Street
Greenville, MS 38701

GS#323-024 ARPA INFR. - WASTE CENT.
TREATMENT
SOUTH MISSISSIPPI CORRECTIONAL INSTITUTION
LEAKESVILLE, MS.

Burle Proj. No.: 08194-1-0122
File Name: C-503 FILTER DETAILS.dwg
Date: 04/29/2024
Scale: 1/2"=1'-0"
Drawn by: JRG
Checked: DTM
Revisions:
Revisions:
Revisions:

DETAILS - FILTERS

C-503
Drawing Number

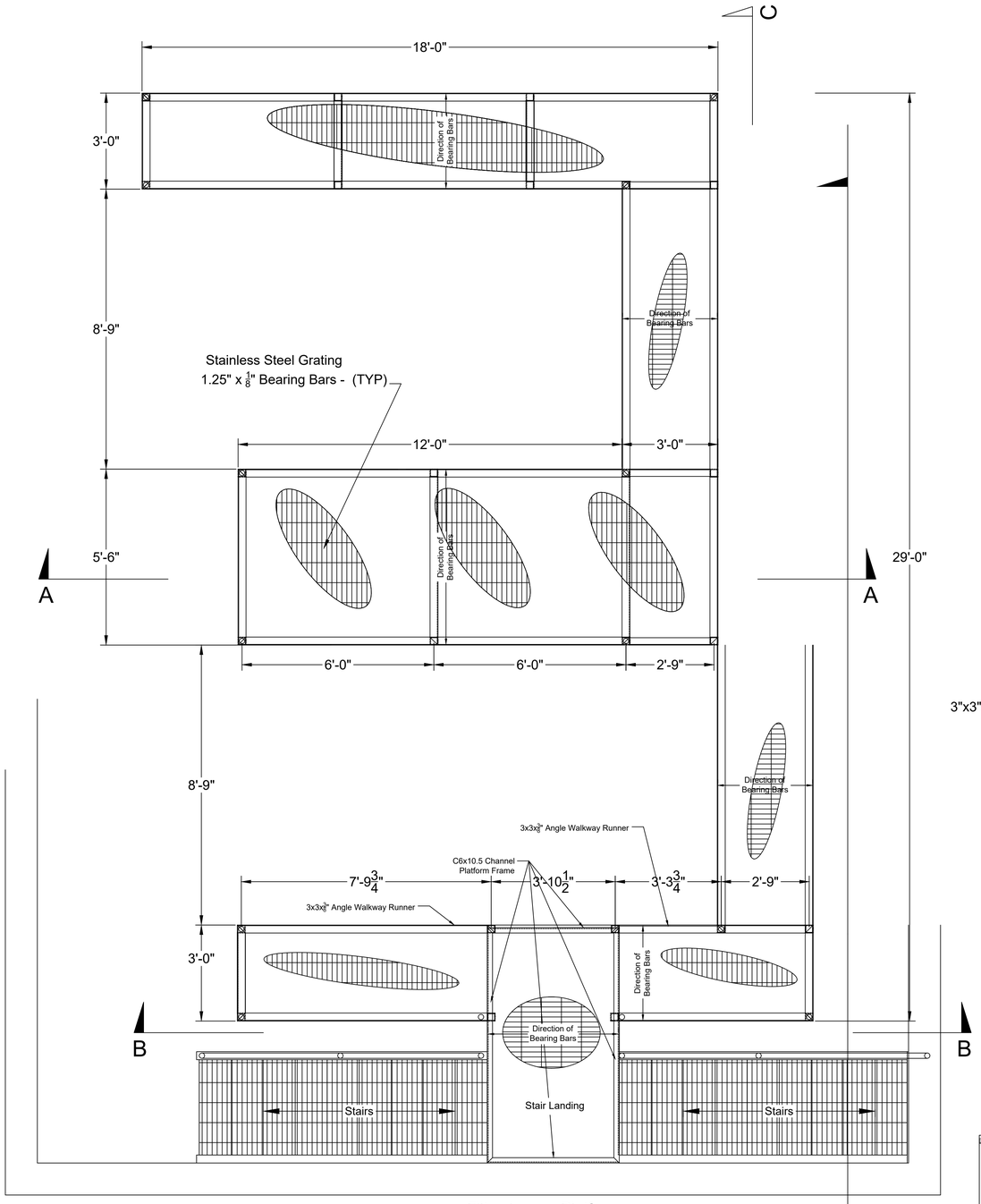

Filter Access Platform
Plan

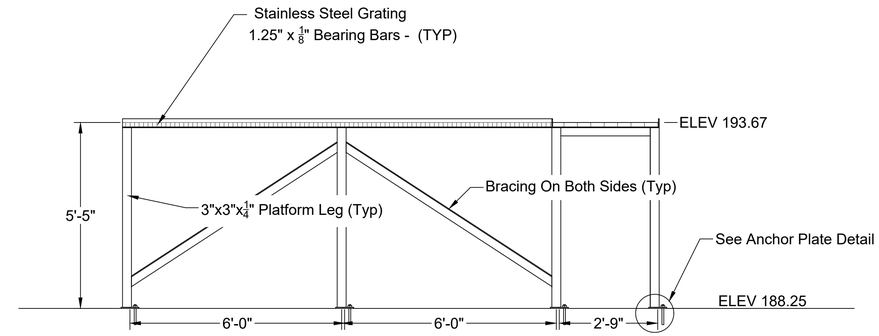

Section A - A

Platform Runners and Bracing are 3"x3"x3/8" Stainless Steel Single Angles

Platform Legs are 3"x3"x1/4" Stainless Steel Square Tubing

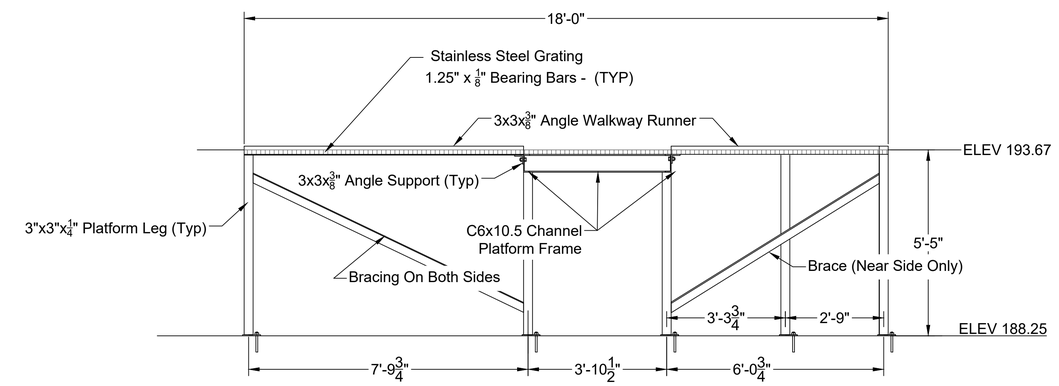

Section B - B

Platform Runners and Bracing are 3"x3"x3/8" Stainless Steel Single Angles

Platform Legs are 3"x3"x1/4" Stainless Steel Square Tubing

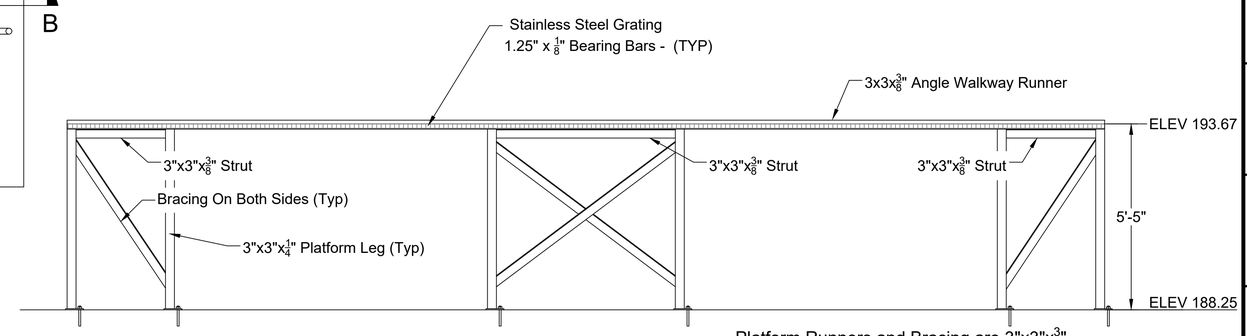

View C - C

Platform Runners and Bracing are 3"x3"x3/8" Stainless Steel Single Angles

Platform Legs are 3"x3"x1/4" Stainless Steel Square Tubing

W. L. BURLE ENGINEERS, P.A.
111 South Walnut Street
Greenville, MS 38701

GS#323-024 ARPA INFR. - WASTE CENT. TREATMENT
SOUTH MISSISSIPPI CORRECTIONAL INSTITUTE
LEAKESVILLE, MISSISSIPPI

Burle Proj. No.:	08194-1-0122
File Name:	FILTER PIT PLATFORM.dwg
Date:	04/29/2024
Scale:	1"=2'
Drawn by:	MC
Checked:	DTM
Revisions:	
Revisions:	
Revisions:	

DETAILS - FILTER PIT PLATFORM

C-504
Drawing Number

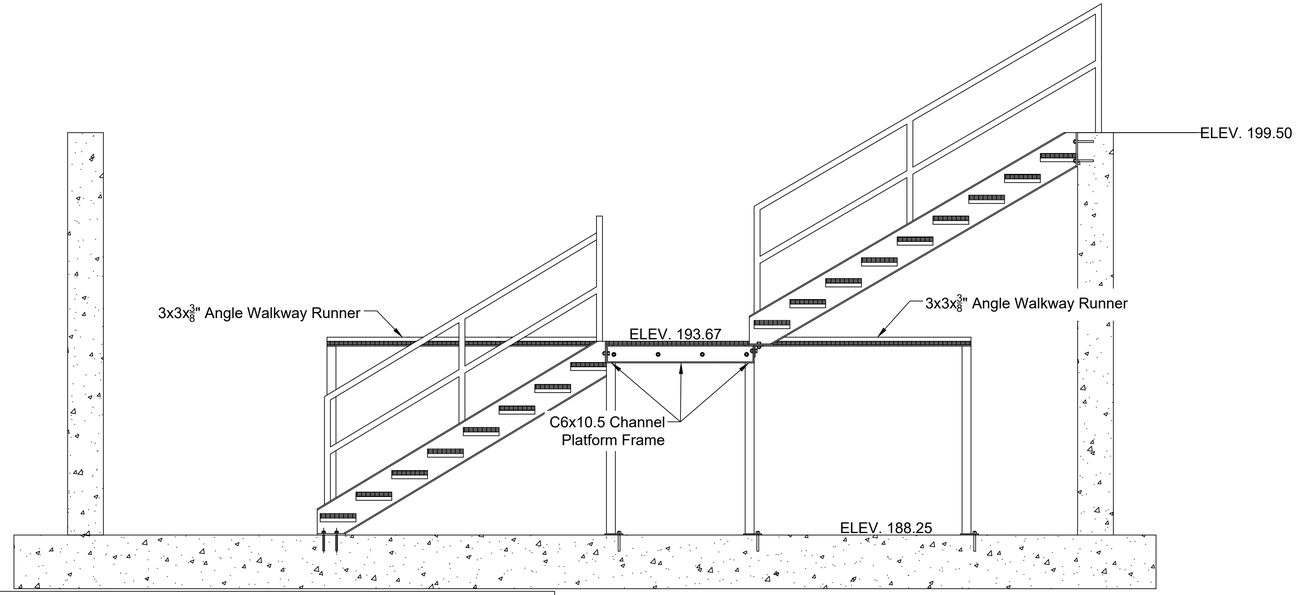

Stair Side Elevation

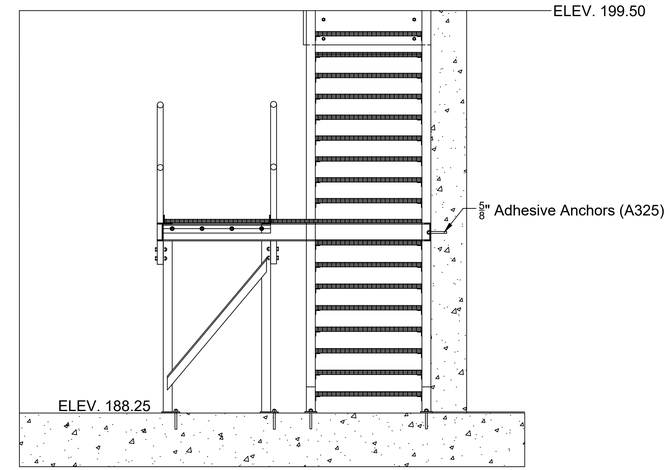

Stair End Elevation

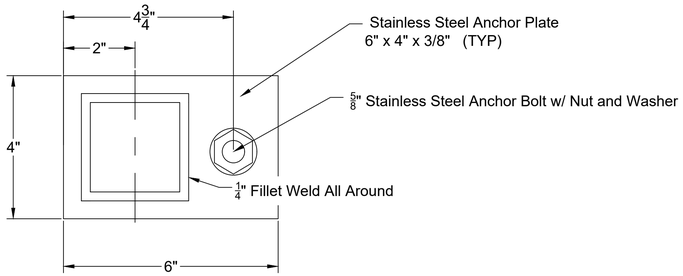

Anchor Plate
Plan

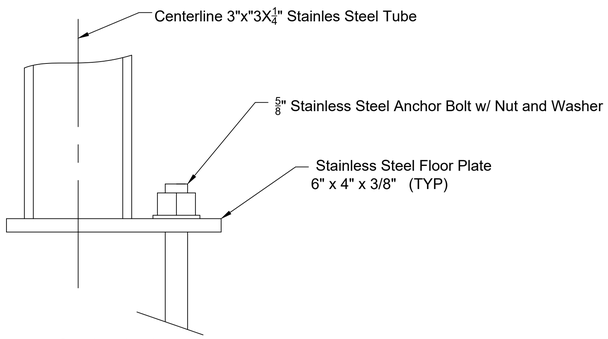

Section A - A

Anchor Plate Detail

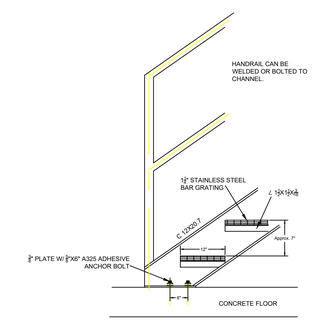

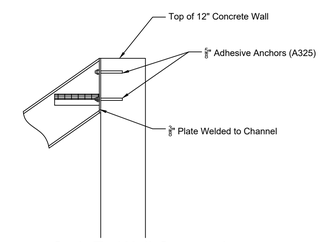

Stair To Wall Connection

Stair Detail

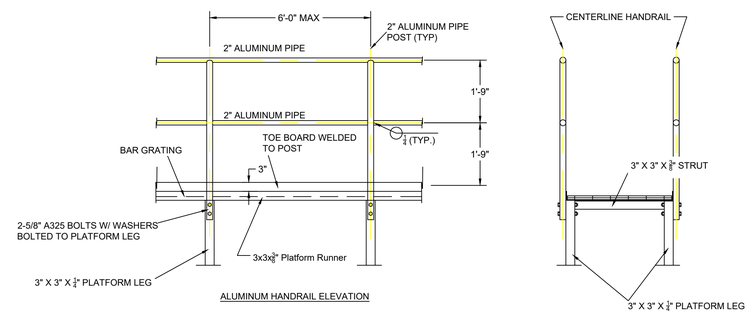

ALUMINUM HANDRAIL ELEVATION

ALUMINUM HANDRAIL CROSS SECTION

ALUMINUM HANDRAIL DETAIL

W. L. BURLE
ENGINEERS, P.A.
111 South Walnut Street
Greenville, MS 38701

GS#323-024 ARPA INFR. - WASTE
CENT. TREATMENT
SOUTH MISSISSIPPI CORRECTIONAL INSTITUTE
LEAKESVILLE, MISSISSIPPI

Burle Proj. No.: 08194-1-0122

File Name: FILTER PIT PLATFORM.dwg

Date: 04/29/2024

Scale: 1"=2'

Drawn by: MC

Checked: DTM

Revisions:

Revisions:

Revisions:

DETAILS - FILTER PIT STAIRS

C-505
Drawing Number

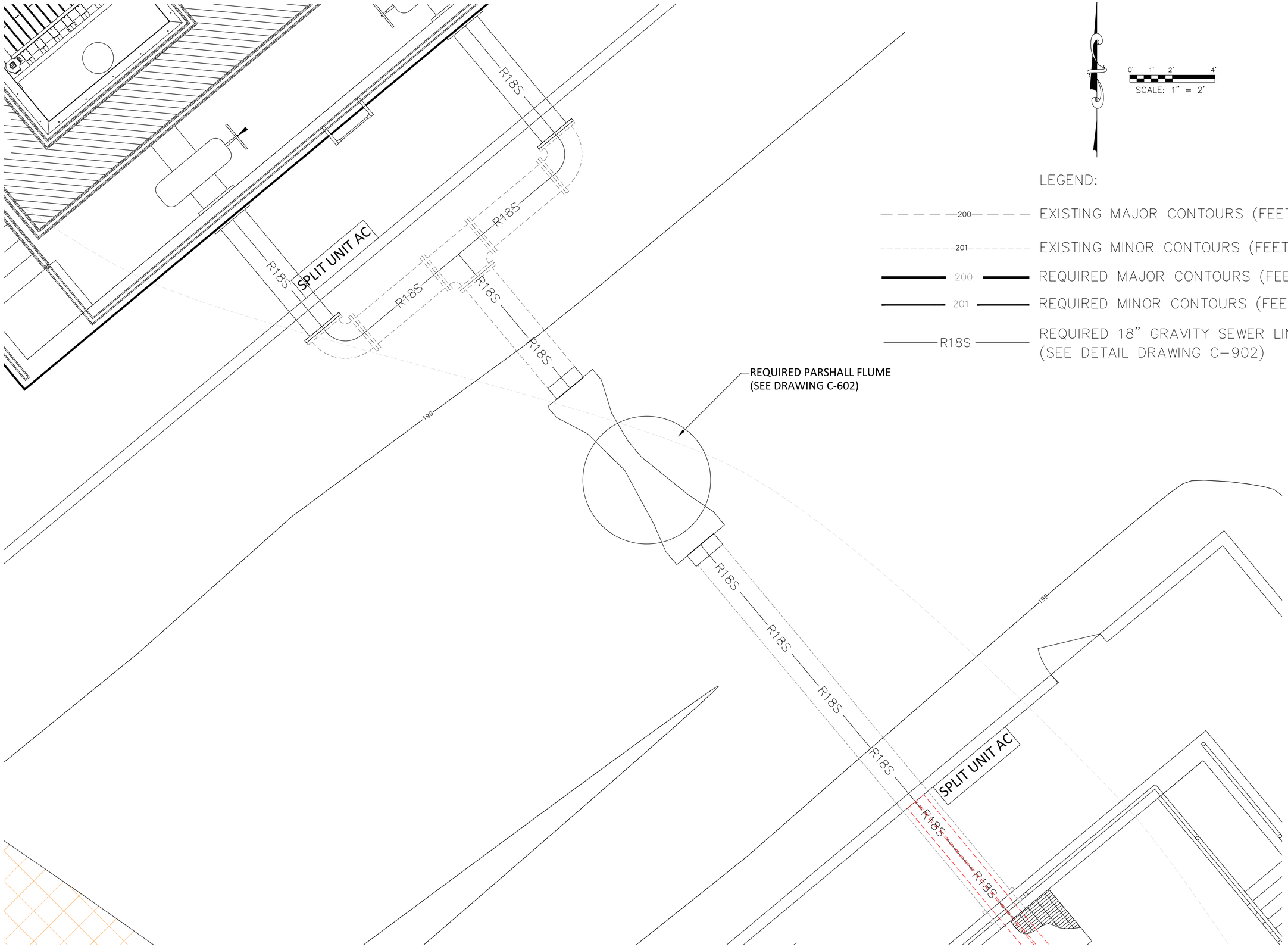

W. L. BURLE
ENGINEERS, P.A.
111 South Walnut Street
Greenville, MS 38701

GS#323-024 ARPA INFR. - WASTE
CENT. TREATMENT
SOUTH MISSISSIPPI CORRECTIONAL INSTITUTION
LEAKESVILLE, MISSISSIPPI

Burle Proj. No.: 08194-1-0122

File Name: C-601 PLAN SHEET - PARSHALL FLUME.DWG

Date: 04/29/2024

Scale: AS SHOWN

Drawn by: MJJ/JRG

Checked: DTM

Revisions:

Revisions:

Revisions:

PLAN VIEW - PARSHALL FLUME

C-601
Drawing Number

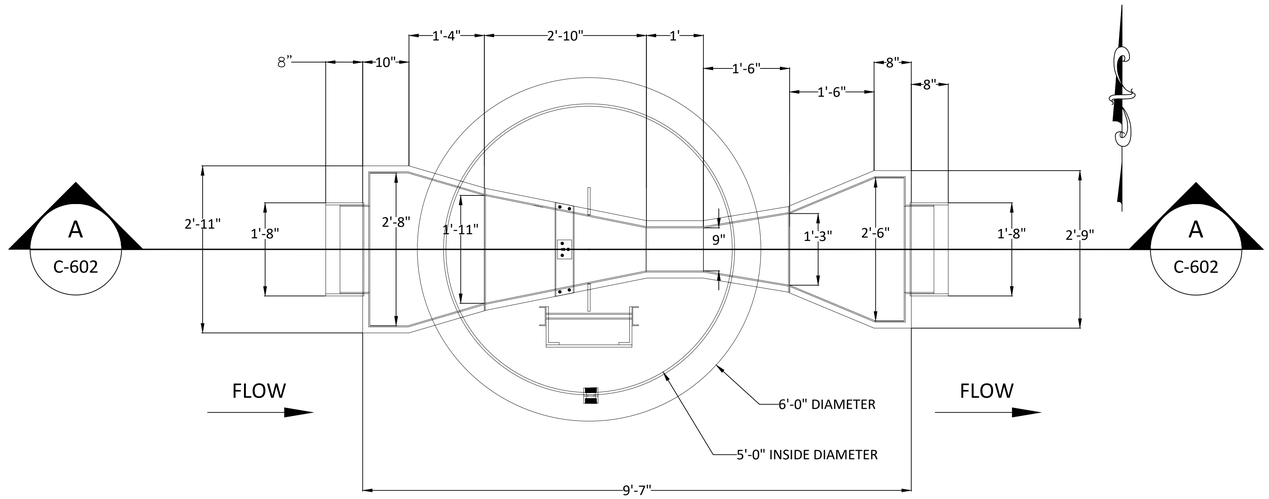

PLAN VIEW - REQUIRED PARSHALL FLUME

NOT TO SCALE

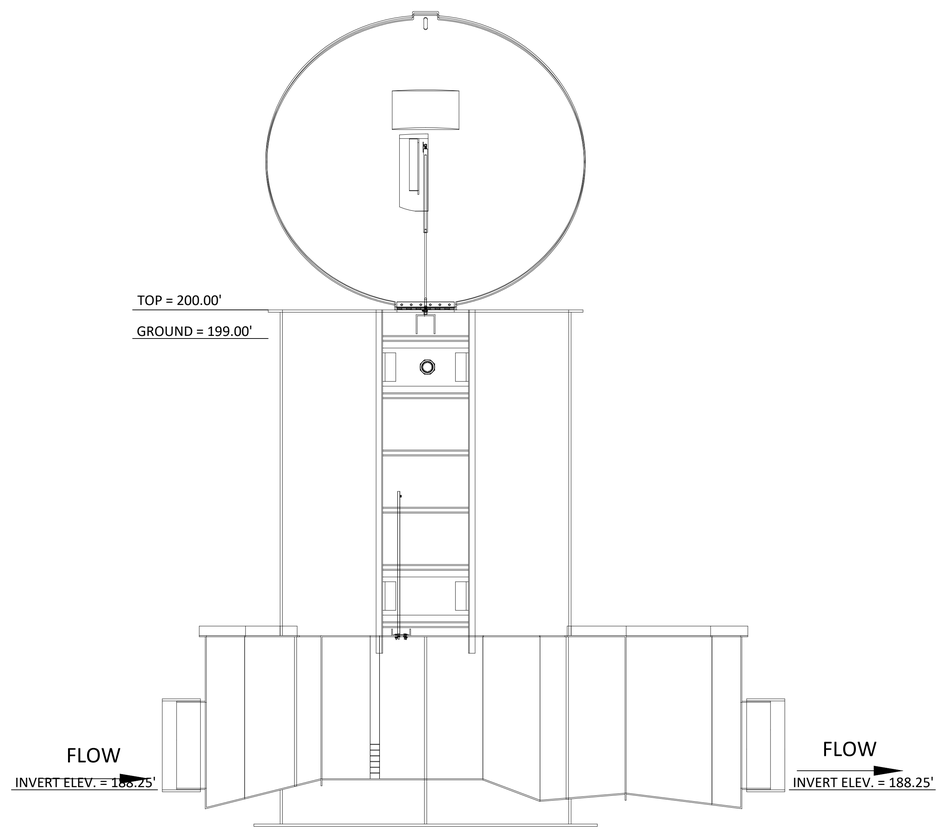

A
C-602

SECTION - PARSHALL FLUME

NOT TO SCALE

W. L. BURLE
ENGINEERS, P.A.
111 South Walnut Street
Greenville, MS 38701

GS#323-024 ARPA INFR. - WASTE
CENT. TREATMENT
SOUTH MISSISSIPPI CORRECTIONAL INSTITUTION
LEAKESVILLE, MISSISSIPPI

Burle Proj. No.: 08194-1-0122
File Name: C-602 PARSHELL FLUME.dwg
Date: 04/29/2024
Scale: 1"=30'
Drawn by: MJJ/JRG
Checked: DTM
Revisions:
Revisions:
Revisions:

SECTION - PARSHALL FLUME

C-602
Drawing Number

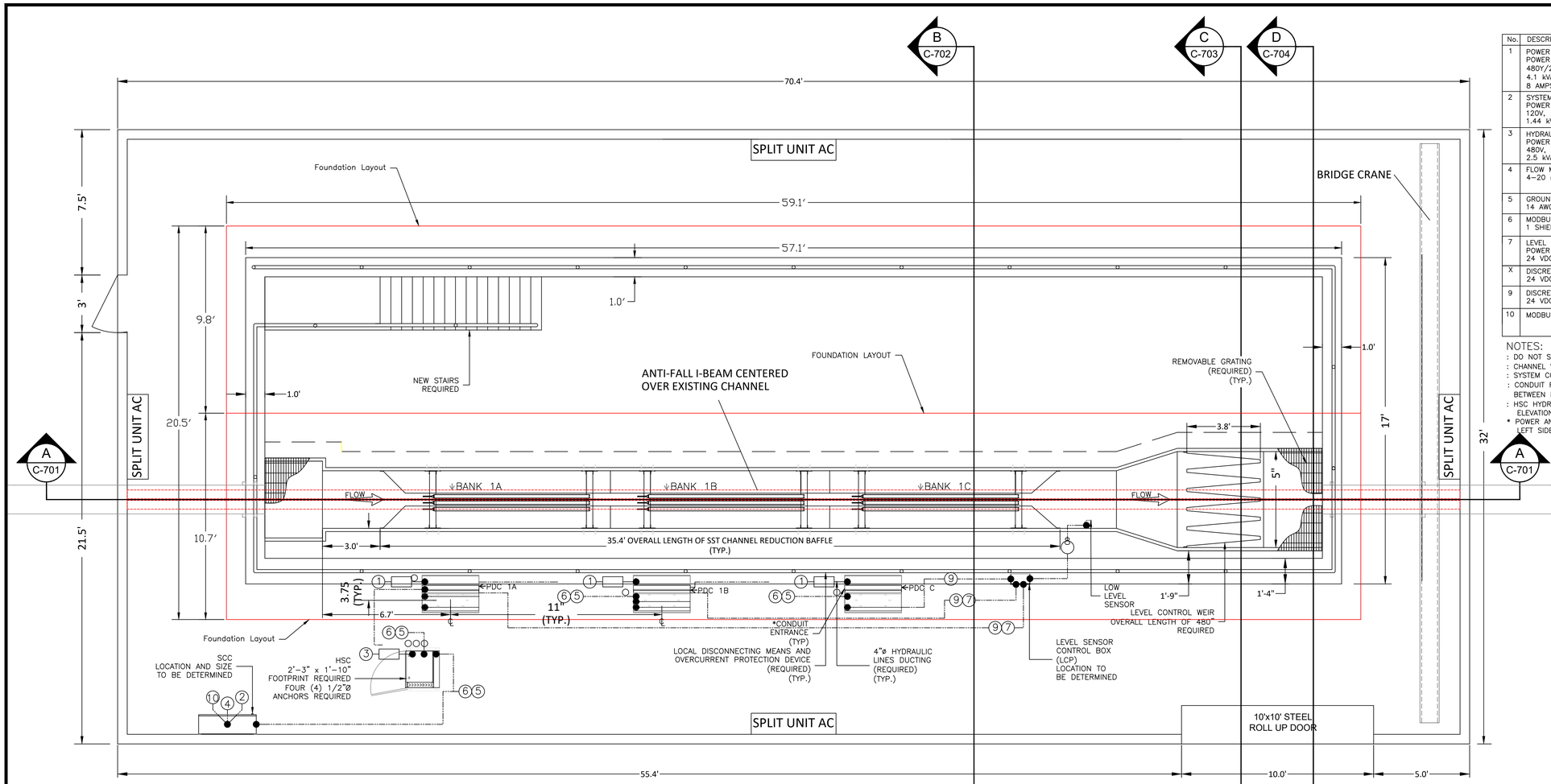

PLAN VIEW - UV DISINFECTION SYSTEM
SCALE:1"=3'

No.	DESCRIPTION	FROM	TO
1	POWER DISTRIBUTION CENTER (PDC) POWER SUPPLY 480Y/277V, 3 PHASE, 4 WIRE + GROUND 4.1 kVA/PDC POWER DRAW 8 AMPS MAXIMUM CURRENT/PHASE	DISTRIBUTION PANEL (DP) (REQUIRED) (NOT SHOWN)	PDCs
2	SYSTEM CONTROL CENTER (SCC) POWER SUPPLY 120V, 1 PHASE, 2 WIRE + GROUND 1.44 kVA, 12 AMPS	DISTRIBUTION PANEL (DP) (REQUIRED) (NOT SHOWN)	SCC
3	HYDRAULIC SYSTEMS CENTER (HSC) POWER SUPPLY 480V, 3 PHASE, 3 WIRE + GROUND 2.5 kVA, 3 AMPS	DISTRIBUTION PANEL (DP) (REQUIRED) (NOT SHOWN)	HSC
4	FLOW METER 4–20 mA, DC ANALOG INPUT	FLOW METER PANEL (NOT SHOWN) (REQUIRED)	SCC
5	GROUND LINK 14 AWG TYPE TWH STRANDED	SCC	PDCs THRU HSC (DAISY CHAINED)
6	MODBUS 1 SHIELDED TWISTED PAIR	SCC	PDCs THRU HSC (DAISY CHAINED)
7	LEVEL CONTROL BOX (LCP) POWER SUPPLY 24 VDC – 2 CONDUCTORS	PDC 1A & 1B	LCP
X	DISCRETE LOW LEVEL SIGNAL 24 VDC – 2 CONDUCTORS	SOURCE	FROM
9	DISCRETE WATER LEVEL SIGNAL 24 VDC – 2 CONDUCTORS	LCP	PDCs
10	MODBUS ETHERNET (PLC) COMMUNICATION	SCC	PLANT SCADA (REQUIRED) (NOT SHOWN)

NOTES:
: DO NOT SLOPE CHANNEL FLOOR.
: CHANNEL WIDTH & DEPTH MUST BE KEPT WITHIN A TOLERANCE OF + OR – ¼".
: SYSTEM CONDUIT, WIRING, DISTRIBUTION PANELS & INTERCONNECTIONS REQUIRED.
: CONDUIT RUN BETWEEN HSC AND PDC 1A & 1B IS 20' MAXIMUM. CONDUIT RUN BETWEEN HSC AND PDC 1C IS 45' MAXIMUM.
: HSC HYDRAULIC ENTRANCE(s) NOT BE MORE THAN 1'–0" BELOW PDC MOUNTING ELEVATION TO PREVENT HSC PUMP FLOODING.
* POWER AND LOW VOLTAGE CONDUITS MUST ENTER LABELED LOCATION ON LEFT SIDE OF PDC.

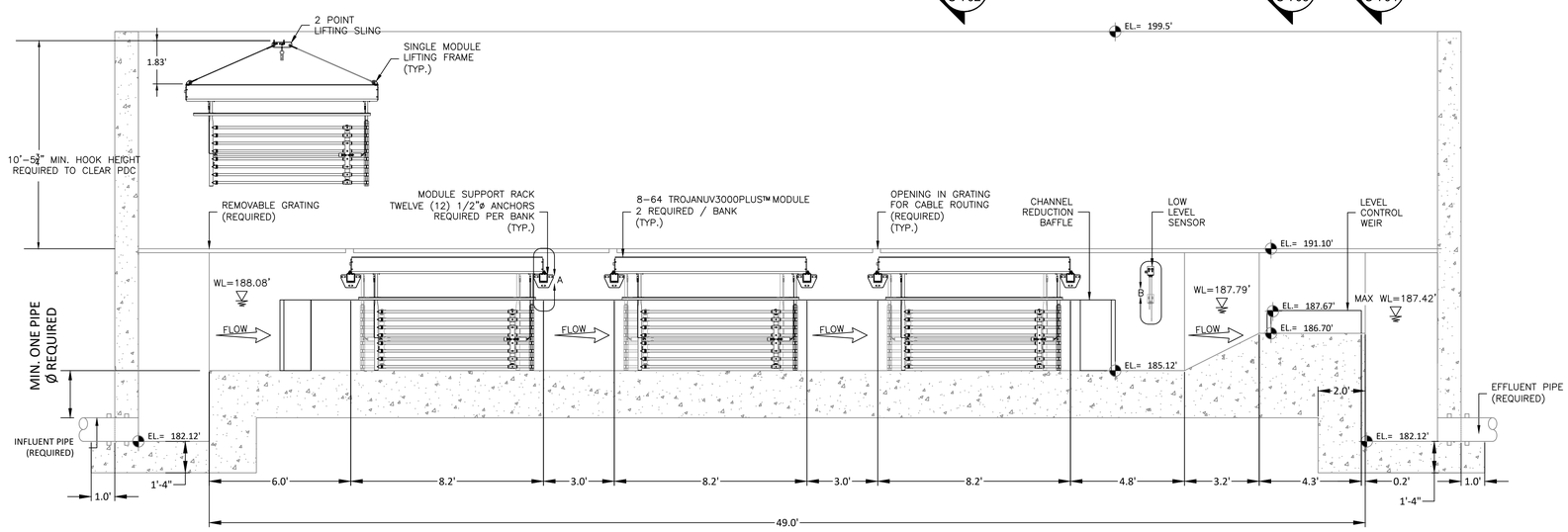

A C-701 SECTION - UV DISINFECTION SYSTEM
SCALE:1"=3'

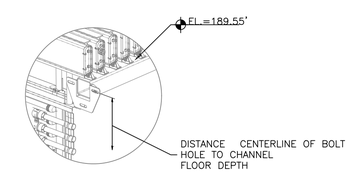

DETAIL A
SCALE: NOT TO SCALE

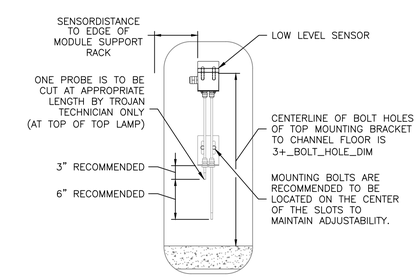

DETAIL A
SCALE: NOT TO SCALE

W. L. BURLE
ENGINEERS, P.A.
111 South Walnut Street
Greenville, MS 38701

GS#323-024 ARPA INFR. - WASTE CENT. TREATMENT
SOUTH MISSISSIPPI CORRECTIONAL INSTITUTION
LEAKESVILLE, MISSISSIPPI

Burle Proj. No.:	08194-1-0122
File Name:	C-701 DISINFECTION SYSTEM.dwg
Date:	04/29/2024
Scale:	AS SHOWN
Drawn by:	MJJ/JRG
Checked:	DTM
Revisions:	
Revisions:	
Revisions:	

PLAN VIEW - REQUIRED UV DISINFECTION SYSTEM

C-701
Drawing Number

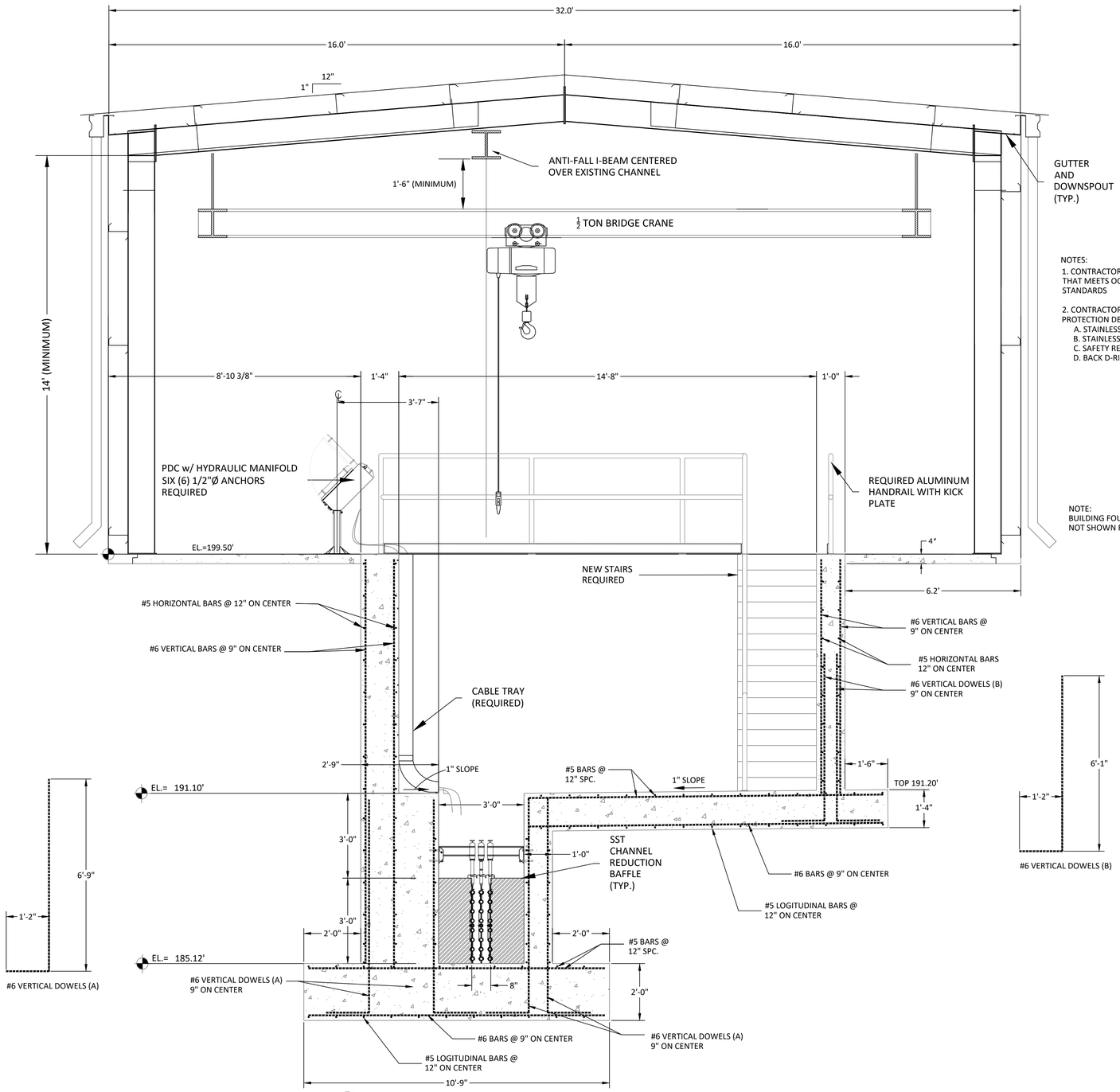

B
C-702
SECTION - UV DISINFECTION SYSTEM
SCALE:1"=2'

1. ENCLOSED METAL BUILDING SHALL BE PRE-ENGINEERED, METAL FRAMED STRUCTURE. PLANS AND SPECIFICATIONS BEARING PROFESSIONAL ENGINEERS'S SEAL SHALL BE SUBMITTED TO THE ENGINEER FOR APPROVAL. COLOR OF METAL BUILDING EXTERIOR SHEETS SHALL BE SELECTED BY THE OWNER.
2. ROLL UP STEEL DOORS SHALL BE RAYNOR DURACOIL MODEL FF DOORS WITH MANUAL OPENERS OR APPROVED EQUAL. COLOR OF DOORS SHALL BE SELECTED BY THE OWNER.
3. BRIDGE CRANE SHALL HAVE A ½ TON CAPACITY AND BE ELECTRICALLY OPERATED IN LIFTING DIRECTION WITH A LIFT SPEED OF 15 FEET PER MINUTE. THE AVAILABLE LIFT SHALL BE 20 FEET AND FEATURE AN UPPER LIMIT SWITCH. THE TROLLEY TYPE SHALL BE PUSH/PULL WITH RUBBER BUMPERS AND SAFETY LUGS. CRANE POWER SUPPLY SHALL BE 120 VOLT, SINGLE PHASE, 60 HERTZ. CROSS CONDUCTORS SHALL BE ROUND FESTOONED CABLE. BRIDGE CRANE AND SUPPORT SYSTEM SHALL BE CONNECTED TO METAL BUILDING STRUCTURAL MEMBERS. DESIGN OF BRIDGE CRANE AND SUPPORT SYSTEM BEARING PROFESSIONAL ENGINEER'S SEAL SHALL BE SUBMITTED TO THE ENGINEER FOR APPROVAL.
4. FOOTINGS AND REINFORCEMENT SHOWN FOR INFORMATION ONLY, PLANS AND SPECIFICATIONS BEARING PROFESSIONAL ENGINEER'S STAMP TO BE SUBMITTED TO ENGINEER FOR APPROVAL BASED UPON AN ALLOWABLE SOIL BEARING PRESSURE OF 1,000 POUNDS PER SQUARE FEET.
5.. SPLIT AIR CONDITIONING UNITS SHALL BE THREE (3) TON UNIT AS MANUFACTURED BY MITSUBISHI OR APPROVED EQUAL.

NOTES:
1. CONTRACTOR SHALL DESIGN AND PROVIDE OVERHEAD FALL PROTECTION THAT MEETS OCCUPATIONAL SAFETY AND HEALTH ADMINISTRATION STANDARDS

2. CONTRACTOR SHALL PROVIDE TWO (2) OF THE FOLLOWING FALL PROTECTION DEVICES:
   A. STAINLESS STEEL ANTI-FALL STANCHION;
   B. STAINLESS STEEL SELF RETRACTING LIFE LINE;
   C. SAFETY RETRIEVAL STATIC LINE; AND
   D. BACK D-RING HARNESS

NOTE:
BUILDING FOUNDATION NOT SHOWN FOR CLARITY.

W. L. BURLE
ENGINEERS, P.A.
111 South Walnut Street
Greenville, MS 38701

GS#323-024 ARPA INFR. - WASTE CENT. TREATMENT
SOUTH MISSISSIPPI CORRECTIONAL INSTITUTION
LEAKESVILLE, MISSISSIPPI

Burle Proj. No.: 08194-1-0122
File Name: C-701 DISINFECTION SYSTEM.dwg
Date: 04/29/2024
Scale: AS SHOWN
Drawn by: MJJ/JRG
Checked: DTM
Revisions:
Revisions:
Revisions:

SECTION - UV DISINFECTION SYSTEM

C-702
Drawing Number

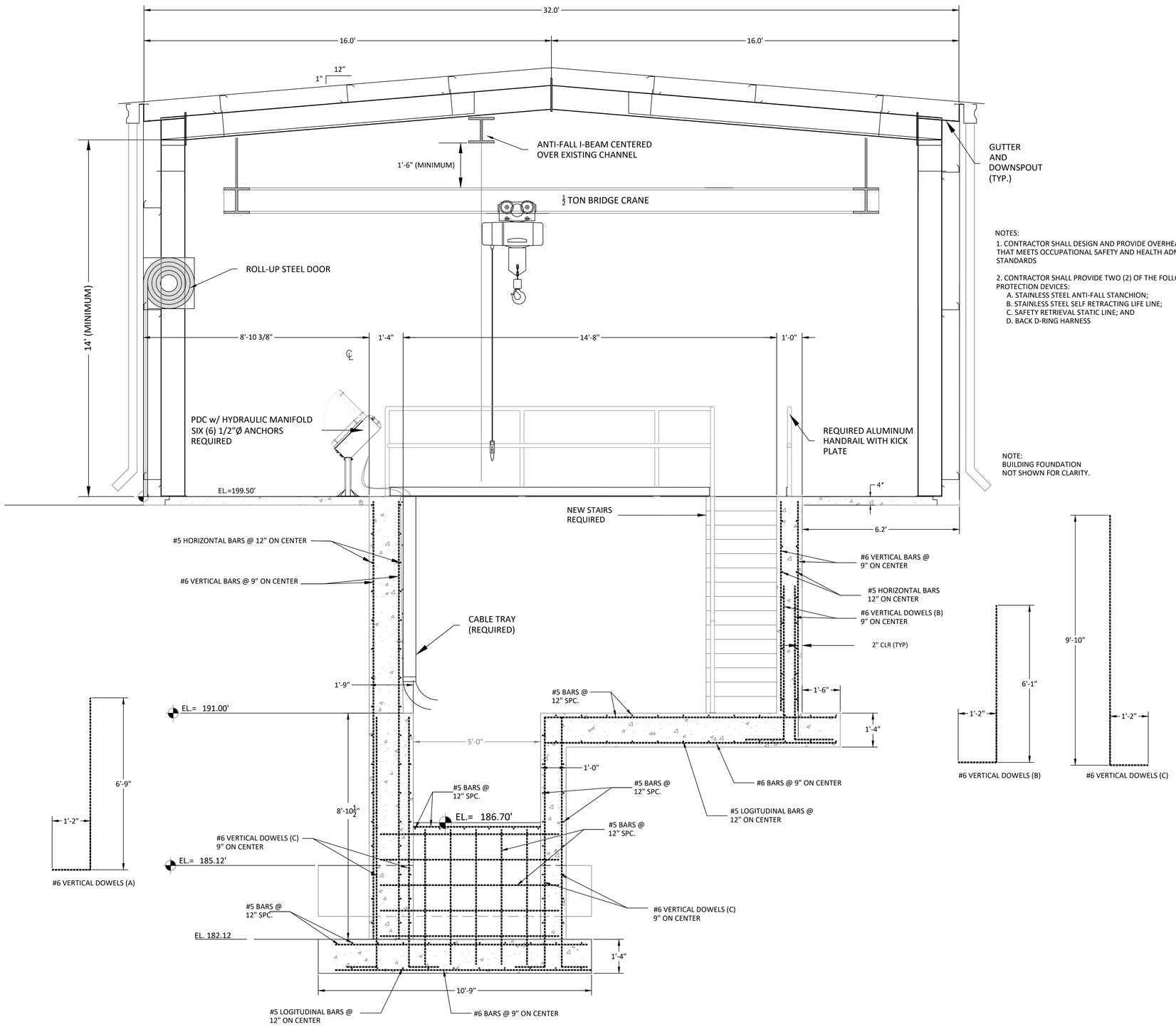

NOTES:

1. CONTRACTOR SHALL DESIGN AND PROVIDE OVERHEAD FALL PROTECTION THAT MEETS OCCUPATIONAL SAFETY AND HEALTH ADMINISTRATION STANDARDS

2. CONTRACTOR SHALL PROVIDE TWO (2) OF THE FOLLOWING FALL PROTECTION DEVICES:
   A. STAINLESS STEEL ANTI-FALL STANCHION;
   B. STAINLESS STEEL SELF RETRACTING LIFE LINE;
   C. SAFETY RETRIEVAL STATIC LINE; AND
   D. BACK D-RING HARNESS

NOTE:
BUILDING FOUNDATION NOT SHOWN FOR CLARITY.

C / C-703 SECTION - UV DISINFECTION SYSTEM
SCALE:1"=2'

W. L. BURLE
ENGINEERS, P.A.
111 South Walnut Street
Greenville, MS 38701

GS#323-024 ARPA INFR. - WASTE CENT. TREATMENT
SOUTH MISSISSIPPI CORRECTIONAL INSTITUTION
LEAKESVILLE, MISSISSIPPI

Burle Proj. No.:	08194-1-0122
File Name:	C-701 DISINFECTION SYSTEM.dwg
Date:	04/29/2024
Scale:	AS SHOWN
Drawn by:	MJJ/JRG
Checked:	DTM
Revisions:	
Revisions:	
Revisions:	

SECTION - UV DISINFECTION SYSTEM

C-703
Drawing Number

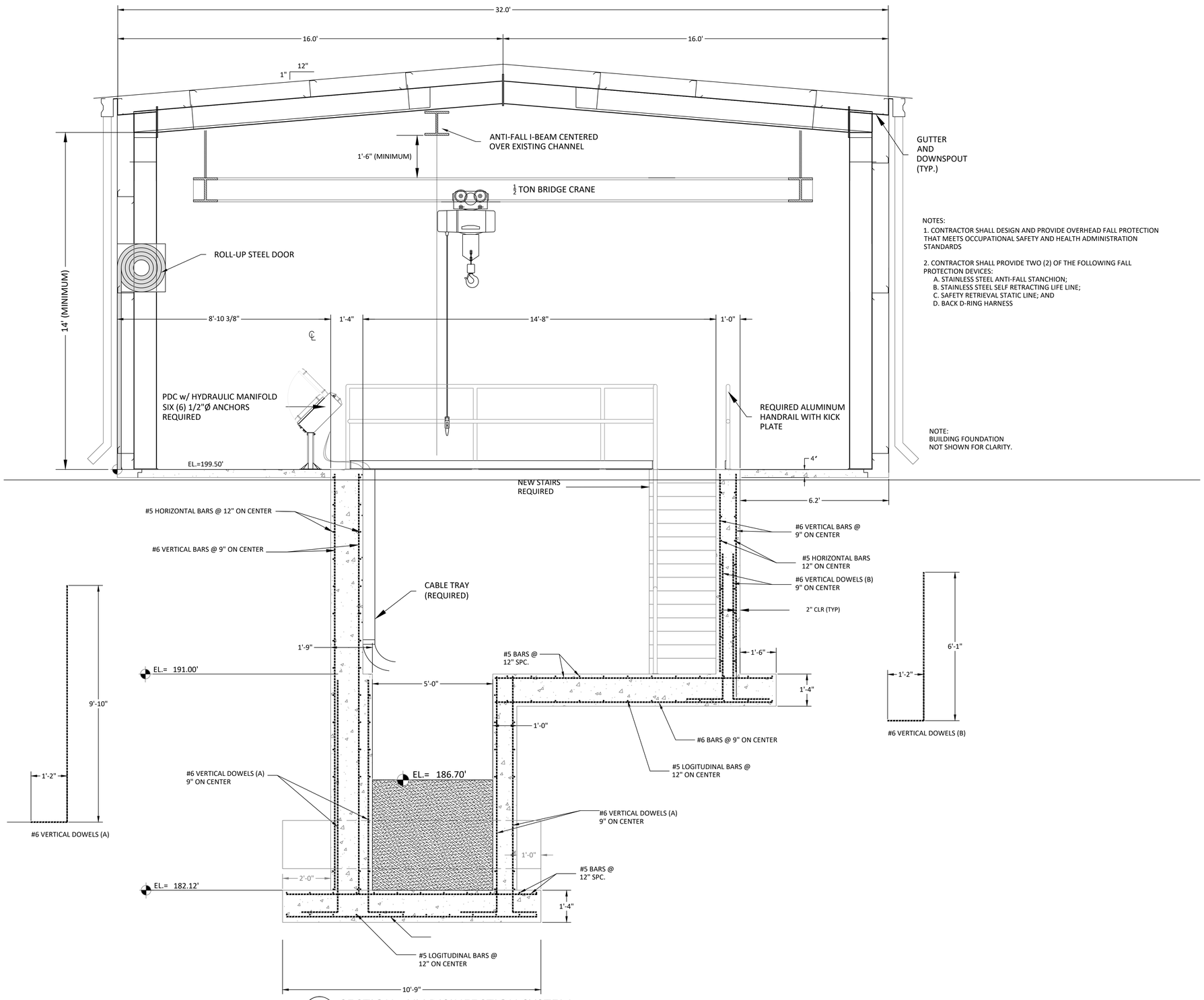

NOTES:

1. CONTRACTOR SHALL DESIGN AND PROVIDE OVERHEAD FALL PROTECTION THAT MEETS OCCUPATIONAL SAFETY AND HEALTH ADMINISTRATION STANDARDS

2. CONTRACTOR SHALL PROVIDE TWO (2) OF THE FOLLOWING FALL PROTECTION DEVICES:
   A. STAINLESS STEEL ANTI-FALL STANCHION;
   B. STAINLESS STEEL SELF RETRACTING LIFE LINE;
   C. SAFETY RETRIEVAL STATIC LINE; AND
   D. BACK D-RING HARNESS

NOTE:
BUILDING FOUNDATION NOT SHOWN FOR CLARITY.

D
C-704

SECTION - UV DISINFECTION SYSTEM

SCALE:1"=2'

W. L. BURLE
ENGINEERS, P.A.
111 South Walnut Street
Greenville, MS 38701

GS#323-024 ARPA INFR. - WASTE CENT. TREATMENT
SOUTH MISSISSIPPI CORRECTIONAL INSTITUTION
LEAKESVILLE, MISSISSIPPI

Burle Proj. No.:	08194-1-0122
File Name:	C-701 DISINFECTION SYSTEM.dwg
Date:	04/29/2024
Scale:	AS SHOWN
Drawn by:	MJJ/JRG
Checked:	DTM
Revisions:	
Revisions:	
Revisions:	

SECTION - UV DISINFECTION SYSTEM

C-704
Drawing Number

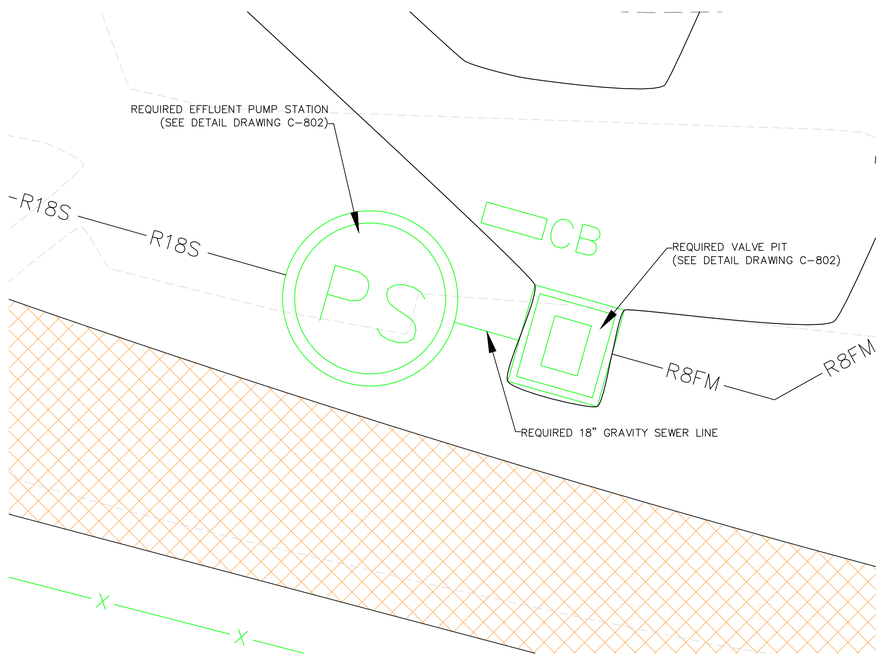

PLAN VIEW - REQUIRED EFFLUENT PUMP STATION

SCALE: 1"= 10'

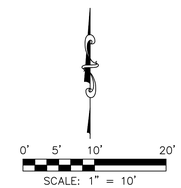

LEGEND:

200	EXISTING MAJOR CONTOURS (FEET)
201	EXISTING MINOR CONTOURS (FEET)
200	REQUIRED MAJOR CONTOURS (FEET)
201	REQUIRED MINOR CONTOURS (FEET)
	REQUIRED CONCRETE (SEE DETAIL DRAWING C-904)
PS	REQUIRED EFFLUENT PUMP STATION (SEE DETAIL DRAWING C-802)
CB	REQUIRED CONTROL BOX (SEE DETAIL DRAWING E-801)
R8FM R8FM	REQUIRED 8" FORCE MAIN
R18S	REQUIRED 18" GRAVITY SEWER LINE

W. L. BURLE
ENGINEERS, P.A.
111 South Walnut Street
Greenville, MS 38701

GS#323-024 ARPA INFR. - WASTE CENT. TREATMENT
SOUTH MISSISSIPPI CORRECTIONAL INSTITUTION
LEAKESVILLE, MS.

Burle Proj. No.: 08194-1-0122

File Name: C-801 PLAN VIEW - EFFLUENT PUMP STATION.DWG

Date: 04/29/2024

Scale: SHOWN

Drawn by: JRG

Checked: DTM

Revisions:

Revisions:

Revisions:

PLAN VIEW - REQUIRED EFFLUENT PUMP STATION

C-801

Drawing Number

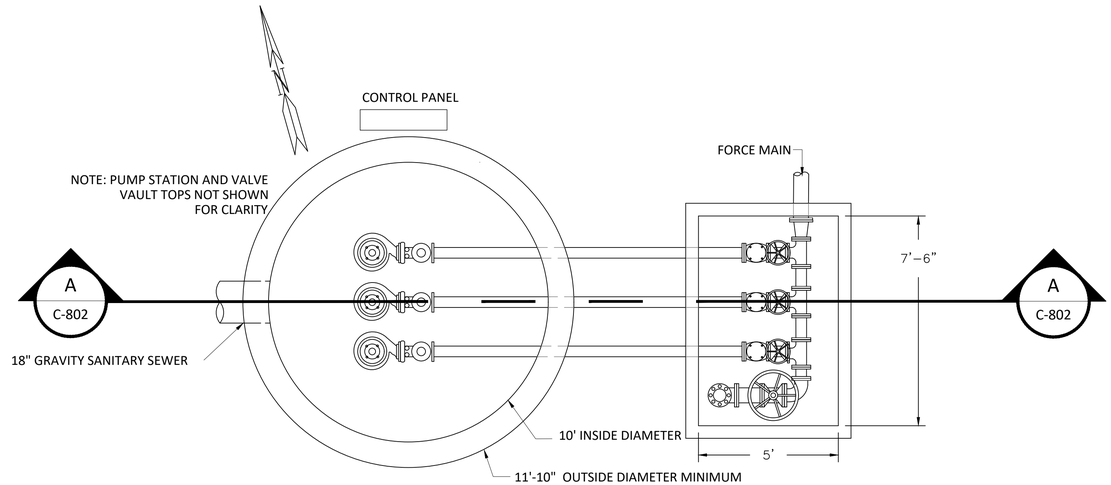

PLAN VIEW - REQUIRED EFFLUENT PUMP STATION

NOT TO SCALE

NOTES:

1. STANDARD PRECAST CONCRETE SECTIONS SHALL COMPLY WITH ASTM C478.
2. ALL PRECAST CONCRETE SECTIONS SHALL BE COATED WITH A MINIMUM OF 20 MIL THICKNESS COAL TAR EPOXY INSIDE AND OUTSIDE.
3. ALL JOINTS SHALL BE COATED INSIDE AND OUTSIDE. JOINT MATERIAL SHALL BE PREFORMED FLEXIBLE MASTIC AND SHALL COMPLY WITH ASTM C990.
4. ALL PIPE ENTERING WETWELLS SHALL BE FITTED WITH WATERSTOP, SEE DETAIL DRAWING C=901.

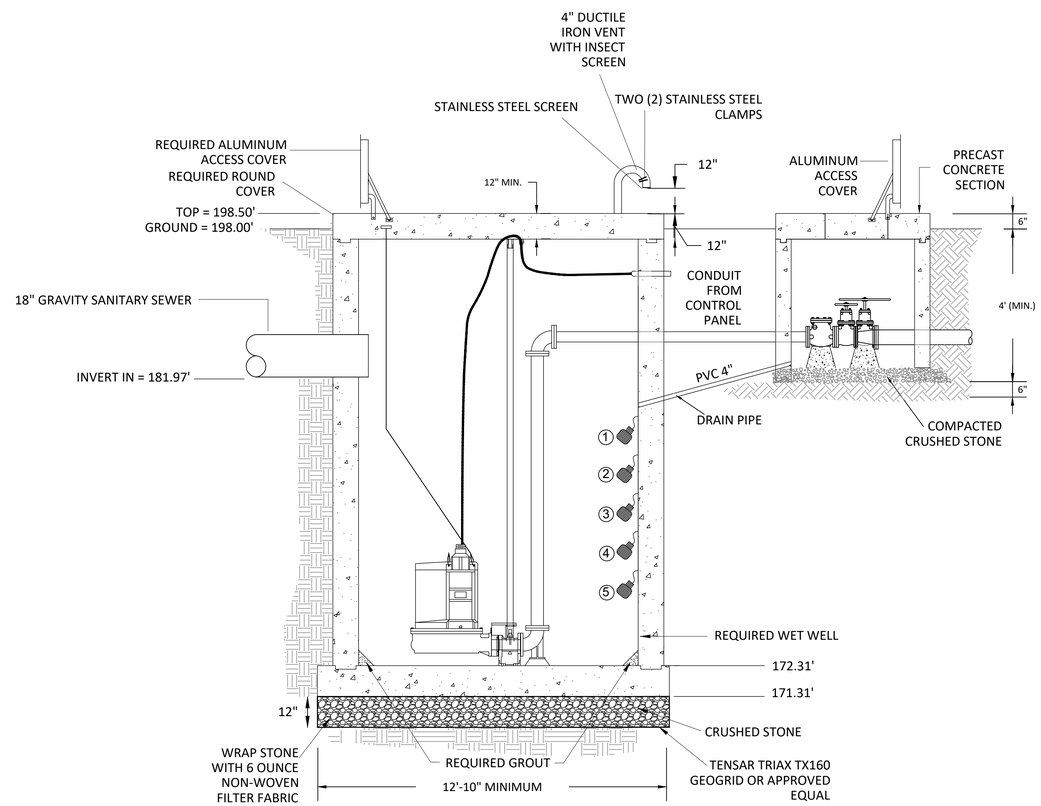

A
C-802

SECTION-REQUIRED EFFLUENT PUMP STATION

NOT TO SCALE

PUMP STATION CONDITIONS				
QUANTITY	H.P.	G.P.M.	T.D.H.	VOLTAGE
3	15	1,100	130	460(3 PH.)

FLOAT SETTING TABLE		
	ALARM NAME	ELEVATION
1	HIGH LEVEL ALARM	181.47'
2	LAG PUMP 2 ON	180.97'
3	LAG PUMP 1 ON	180.47'
4	LEAD PUMP ON	179.97'
5	PUMP OFF	176.23'

W. L. BURLE
ENGINEERS, P. A.
111 SOUTH WALNUT STREET
GREENVILLE, MS 38701

GS#323-024 ARPA INFR. - WASTE CENT. TREATMENT
SOUTH MISSISSIPPI CORRECTIONAL INSTITUTION
LEAKESVILLE, MISSISSIPPI

BURLE PROJECT NUMBER: 08194-1-0122
FILE NAME: EFFLUENT PUMP STATION.dwg
DATE: 04/29/2024
SCALE: NOT TO SCALE
DRAWN BY: JRG
CHECKED BY: DTM
REVISIONS:
REVISIONS:
REVISIONS:

DETAILS-
REQUIRED EFFLUENT PUMP STATION

C-802
DRAWING NUMBER

0' 2.5' 5' 10'

SCALE: 1" = 5'

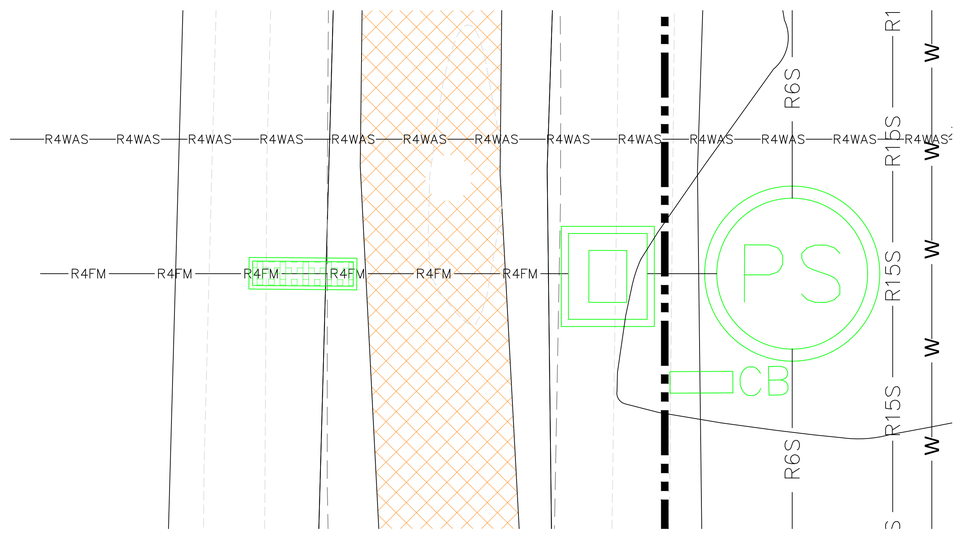

PLAN VIEW - REQUIRED SCUM PUMP STATION

SCALE: 1"= 5'

LEGEND:

200	EXISTING MAJOR CONTOURS (FEET)
201	EXISTING MINOR CONTOURS (FEET)
	EXISTING TOP BANK OF DITCH
	EXISTING TOE EDGE OF DITCH
	EXISTING CENTERLINE OF DITCH
	REQUIRED 8" FORCE MAIN (SEE DETAIL DRAWING C-902)
R12S	REQUIRED RETURN ACTIVATED SLUDGE GRAVITY LINE (SEE DETAIL DRAWING C-902)
R15S	REQUIRED 15" GRAVITY SEWER LINE (SEE DETAIL DRAWING C-902)
W	REQUIRED WATER LINE (SEE DETAIL DRAWING C-903)
	REQUIRED 6" AIR LINE (SEE DETAIL DRAWING C-902)
	REQUIRED 18" GRAVITY SEWER LINE (SEE DETAIL DRAWING C-902)
R4WAS	REQUIRED 4" WAS LINE (SEE DETAIL DRAWING C-902)
	FLOW DIRECTION
PS	REQUIRED SCUM PUMPING STATION (SEE DETAIL DRAWING C-804)
	REQUIRED HYDRANT
	EXISTING GRAVELED AREA
S	REQUIRED MANHOLE
CB	REQUIRED CONTROL BOX (SEE ELECTRICAL DRAWINGS)

WL BURLE
ENGINEERS, P.A.
111 South Walnut Street
Greenville, MS 38701

GS#323-024 ARPA INFR. - WASTE CENT. TREATMENT
SOUTH MISSISSIPPI CORRECTIONAL INSTITUTION
LEAKESVILLE, MISSISSIPPI

Burle Proj. No.: 08194-1-0122

File Name: C-803 - PLAN VIEW - REQUIRED SCUM PUMPING STATION.DWG

Date: 04/29/2024

Scale: 1"=30'

Drawn by: JRG

Checked: DTM

Revisions:

Revisions:

Revisions:

PLAN VIEW - REQUIRED SCUM PUMP STATION

C-803

Drawing Number

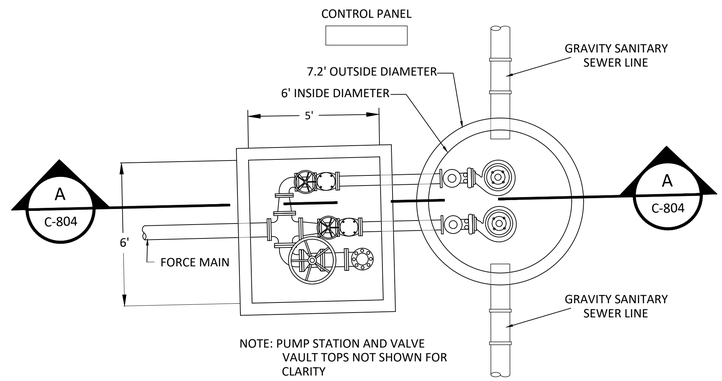

PLAN VIEW-REQUIRED SCUM PUMP STATION

NOT TO SCALE

NOTES:

1. STANDARD PRECAST CONCRETE SECTIONS SHALL COMPLY WITH ASTM C478.
2. ALL PRECAST CONCRETE SECTIONS SHALL BE COATED WITH A MINIMUM OF 20 MIL THICKNESS COAL TAR EPOXY INSIDE AND OUTSIDE.
3. ALL JOINTS SHALL BE COATED INSIDE AND OUTSIDE. JOINT MATERIAL SHALL BE PREFORMED FLEXIBLE MASTIC AND SHALL COMPLY WITH ASTM C990.
4. ALL PIPE ENTERING WETWELLS SHALL BE FITTED WITH WATERSTOP, SEE DETAIL DRAWING C=901.

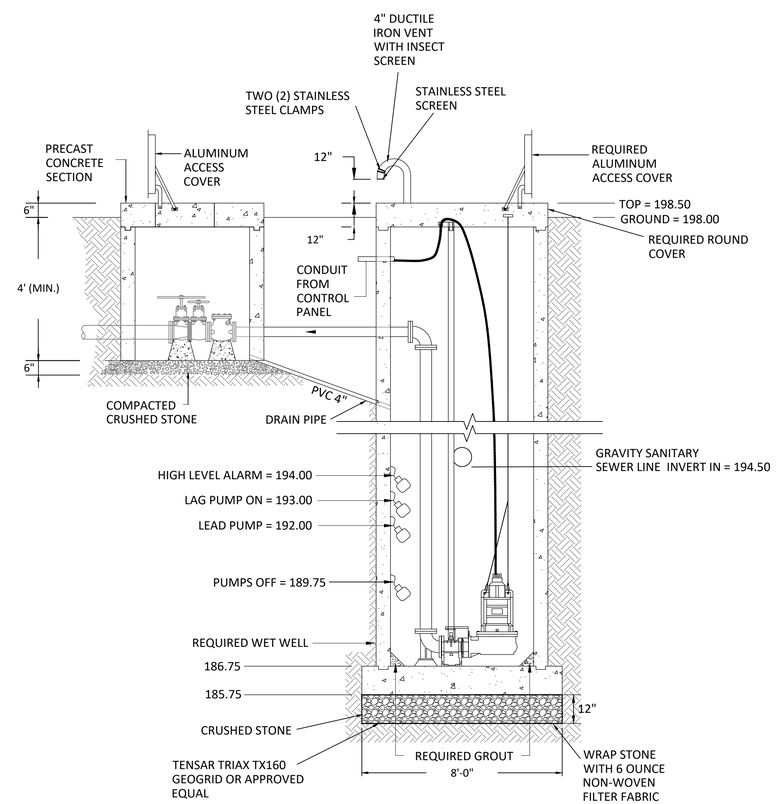

A
C-804

SECTION-REQUIRED SCUM PUMP STATION

NOT TO SCALE

PUMP STATION CONDITIONS				
QUANTITY	H.P.	G.P.M.	T.D.H.	VOLTAGE
2	3	250	11	460(3 PH.)

FLOAT SETTING TABLE		
	ALARM NAME	ELEVATION
1	HIGH LEVEL ALARM	194.00'
2	LAG PUMP 1 ON	193.00'
3	LEAD PUMP ON	192.00'
4	PUMP OFF	189.75'

WL BURLE
ENGINEERS, P.A.
111 South Walnut Street
Greenville, MS 38701

GS#323-024 ARPA INFR. - WASTE CENT. TREATMENT
SOUTH MISSISSIPPI CORRECTIONAL INSTITUTION
LEAKESVILLE, MISSISSIPPI

Burle Proj. No.: 08194-1-0122

File Name: C-804 - DETAIL - REQUIRED SCUM PUMPING STATION.DWG

Date: 04/29/2024

Scale: 1"=30'

Drawn by: JRG

Checked: DTM

Revisions:

Revisions:

Revisions:

DETAILS - REQUIRED SCUM PUMP STATION

C-804
Drawing Number

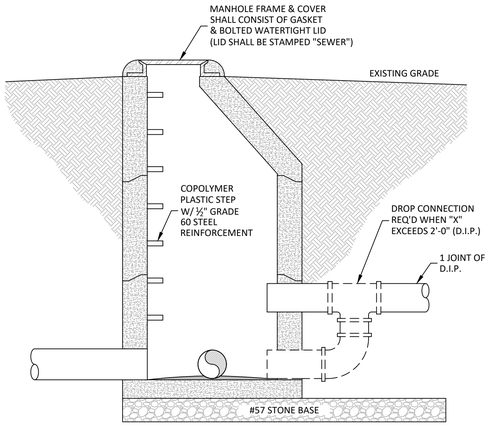

DETAIL - STANDARD MANHOLE

NOT TO SCALE

NOTES:

1. STANDARD PRECAST CONCRETE MANHOLE SHALL COMPLY WITH ASTM STANDARD C478
2. ALL PRECAST MANHOLE SECTIONS SHALL BE COATED WITH 20 MIL THICKNESS COAL TAR EPOXY.
3. ALL JOINTS SHALL BE GROUTED INSIDE AND OUTSIDE. JOINT MATERIAL SHALL BE PREFORMED FLEXIBLE MASTIC AND SHALL COMPLY WITH ASTM C990
4. ALL PIPES ENTERING MANHOLES SHALL BE FITTED WITH WATERSTOP SEE DETAIL.
5. THICKNESS OF CONCRETE OF BENCHES SHALL BE A MINIMUM OF SIX (6) INCHES THROUGHOUT THE ENTIRE AREA OF BENCH. BENCHES SHALL BE BUILT/ RECONSTRUCTED SUCH THAT THERE IS A CONSISTENT MINIMUM SURFACE GRADE OF ONE PERCENT (1%) FROM INSIDE OF MANHOLE WALL TO EDGE OF TROUGH PIPING.
6. CONTRACTOR SHALL VERIFY MANHOLE DIAMETERS, DEPTH OF COVER AND NECESSARY COMPONENTS TO COMPLETE PROJECT.

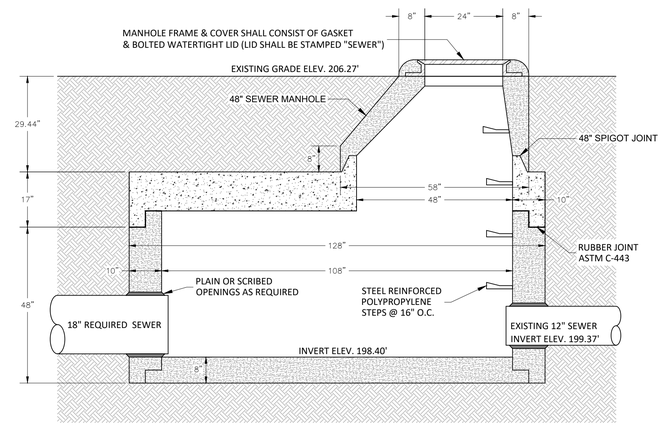

DETAIL - MANHOLE No. 8

NOT TO SCALE

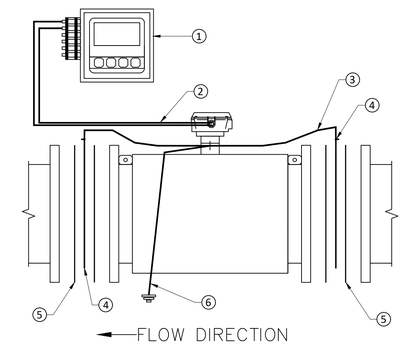

NO.	DESCRIPTION
1	CONVERTER (DUAL 4-20mA OUTPUT)
2	DUAL CABLES - SUBMERSIBLE
3	GROUNDING WIRE ASSEMBLY - 10 AWG
4	GROUNDING RINGS, STAINLESS STEEL
5	GASKETS
6	EARTH GROUND

SECTION - FLOW METER

NOT TO SCALE

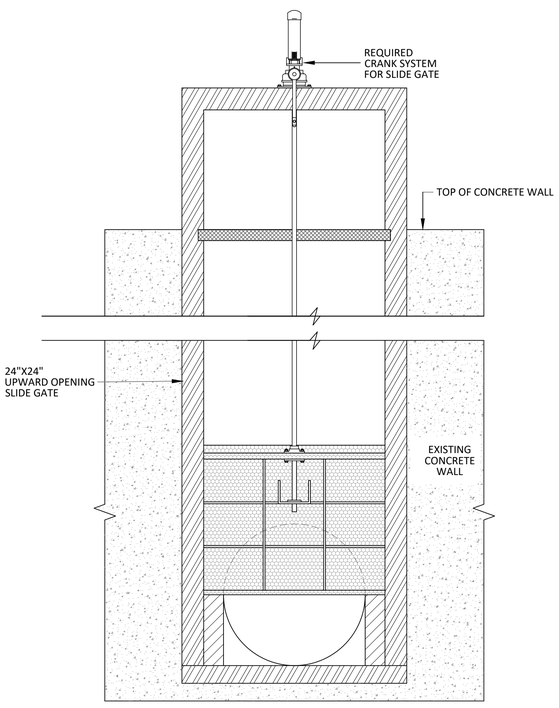

DETAIL - UPWARD OPENING SLIDE GATE

NOT TO SCALE

NOTE:

1. SLIDE GATES SHALL BE 24"x24" FABRICATED SLIDE GATE TYPE 304 STAINLESS STEEL FRAME AND SLIDE.

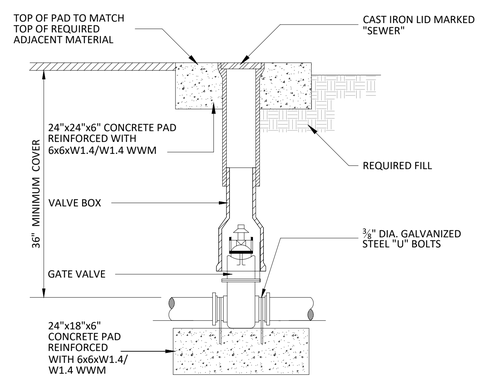

DETAIL - GATE VALVE

NOT TO SCALE

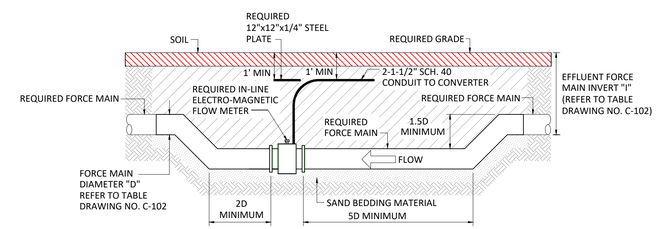

NOTES:

1. METALLIC MARKING TAPE AND THRUST BLOCKS NOT SHOWN FOR CLARITY.
2. ALL FITTINGS SHALL BE FLANGED DUCTILE IRON.
3. GROUNDING RINGS AND GASKETS REQUIRED PER DETAILS. (SEE DETAIL THIS DRAWING)
4. "D" EQUALS NOMINAL PIPE DIAMETER.
5. BEDDING MATERIAL THICKNESS SHALL BE "D/2" PLUS TWO (2) INCHES, AS MEASURED. FROM THE SPRING LINE OF THE PIPE.
6. MECHANICAL COMPACTION EQUIPMENT SHALL NOT BE USED ADJACENT TO OR ABOVE FLOW METER.

DETAIL - FLOW METER & FORCE MAIN TRAP

NOT TO SCALE

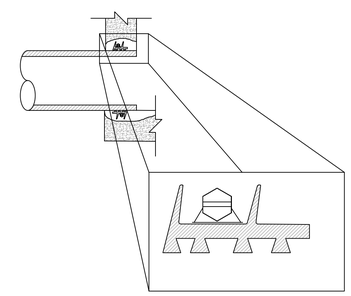

DETAIL - REQUIRED WATER STOP

NOT TO SCALE

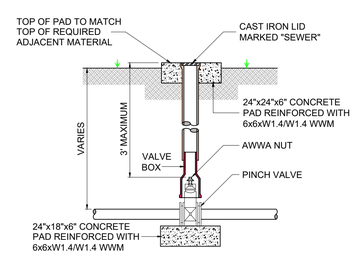

DETAIL - PINCH VALVE INSTALLED IN TURF

NOT TO SCALE

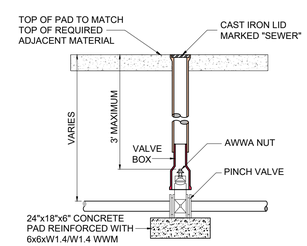

DETAIL - PINCH VALVE INSTALLED IN PAVEMENT

NOT TO SCALE

W. L. BURLE
ENGINEERS, P.A.
111 South Walnut Street
Greenville, MS 38701

GS#323-024 ARPA INFR. - WASTE
CENT. TREATMENT
SOUTH MISSISSIPPI CORRECTIONAL INSTITUTION
LEAKESVILLE, MISSISSIPPI

Burle Proj. No.: 08194-1-0122

File Name: C-902 DETAILS-SANITARY SEWER.dwg

Date: 04/29/2024

Scale: 1"=30'

Drawn by: JRG

Checked: DTM

Revisions:

Revisions:

Revisions:

DETAILS - SANITARY SEWER

C-901

Drawing Number

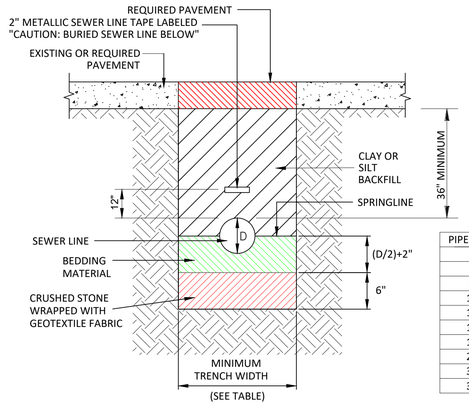

MINIMUM TRENCH WIDTHS

PIPE DIAM.	MIN. TRENCH WIDTH
4"	21"
6"	23"
8"	26"
10"	28"
12"	30"
15"	34"
18"	39"
24"	48"
30"	56"
36"	64"

DETAIL - SEWER LINE TRENCH PAVED AREAS

NOT TO SCALE

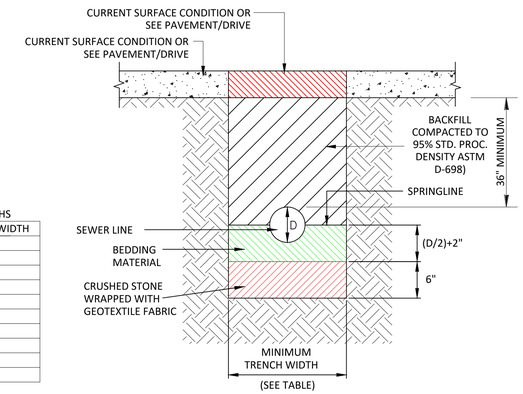

DETAIL - FORCE MAIN OPEN TRENCH PAVED AREAS

NOT TO SCALE

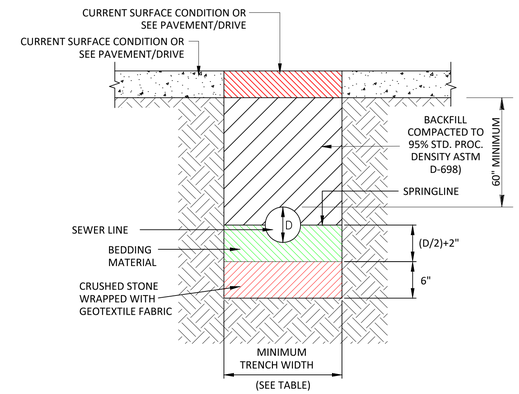

DETAIL - AIR LINE OPEN TRENCH PAVED AREAS

NOT TO SCALE

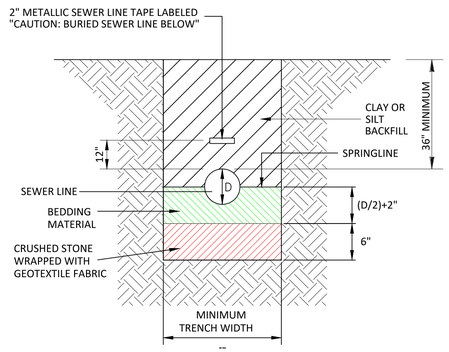

DETAIL - SEWER LINE TRENCH

NOT TO SCALE

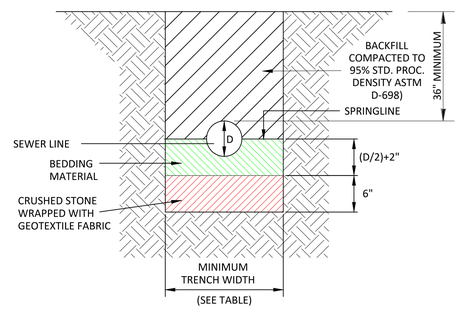

DETAIL - FORCE MAIN OPEN TRENCH

NOT TO SCALE

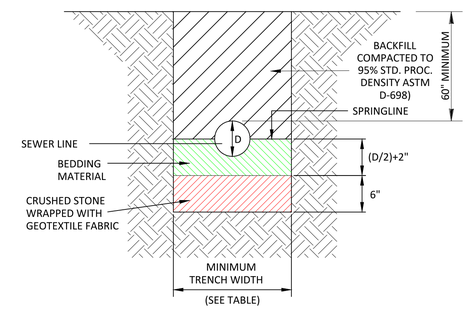

DETAIL - AIR LINE OPEN TRENCH

NOT TO SCALE

NOTES:

1. REINFORCING NOT SHOWN FOR CLARITY
2. PIPE SEALS SHALL BE INSTALLED AT ALL PIPE PENETRATIONS THROUGH REQUIRED CONCRETE
3. PIPE SEALS SHALL BE INSTALLED PER MANUFACTURES WRITTEN INSTALLATION INSTRUCTIONS.

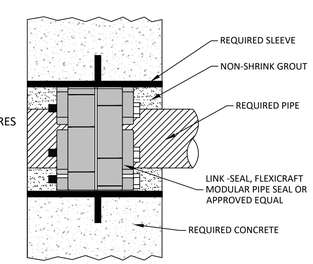

DETAIL - TYPICAL CONCRETE WALL SLEEVE PIPE PENETRATION

NOT TO SCALE

NOTES:

1. REINFORCING NOT SHOWN FOR CLARITY
2. PIPE SEALS SHALL BE INSTALLED AT ALL PIPE PENETRATIONS THROUGH EXISTING CONCRETE
3. PIPE SEALS SHALL BE INSTALLED PER MANUFACTURES WRITTEN INSTALLATION INSTRUCTIONS.

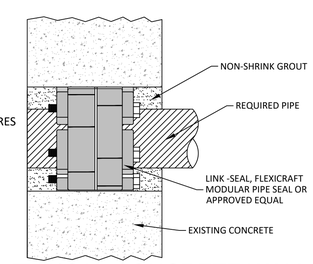

DETAIL - TYPICAL CONCRETE WALL SLEEVE PIPE PENETRATION

NOT TO SCALE

W. L. BURLE
ENGINEERS, P.A.
111 South Walnut Street
Greenville, MS 38701

GS#323-024 ARPA INFR. - WASTE CENT. TREATMENT
SOUTH MISSISSIPPI CORRECTIONAL INSTITUTION
LEAKESVILLE, MISSISSIPPI

Burle Proj. No.: 08194-1-0122

File Name: C-902 DETAILS-SANITARY SEWER.dwg

Date: 04/29/2024

Scale: 1"=30'

Drawn by: JRG

Checked: DTM

Revisions:

Revisions:

Revisions:

DETAILS - SANITARY SEWER

C-902

Drawing Number

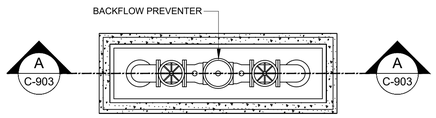

PLAN BACKFLOW PREVENTER ASSEMBLY

NOT TO SCALE

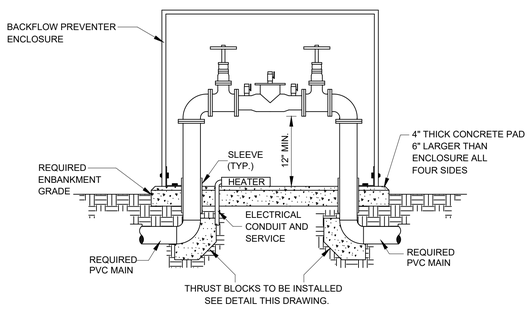

SECTION - BACKFLOW PREVENTER ASSEMBLY

A
C-903

NOT TO SCALE

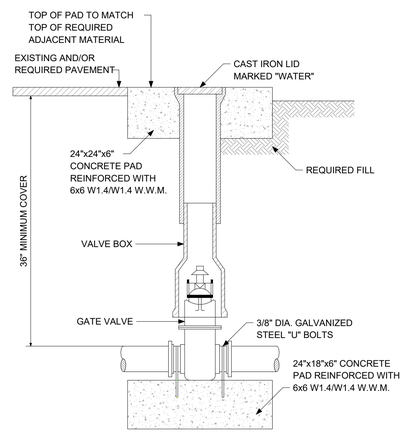

DETAIL - GATE VALVE

NOT TO SCALE

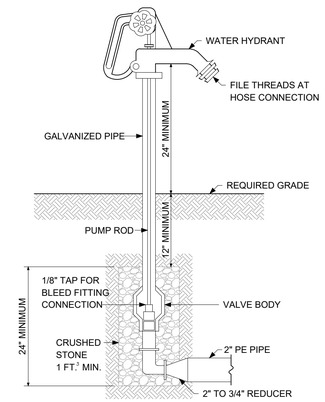

DETAIL - WATER HYDRANT

NOT TO SCALE

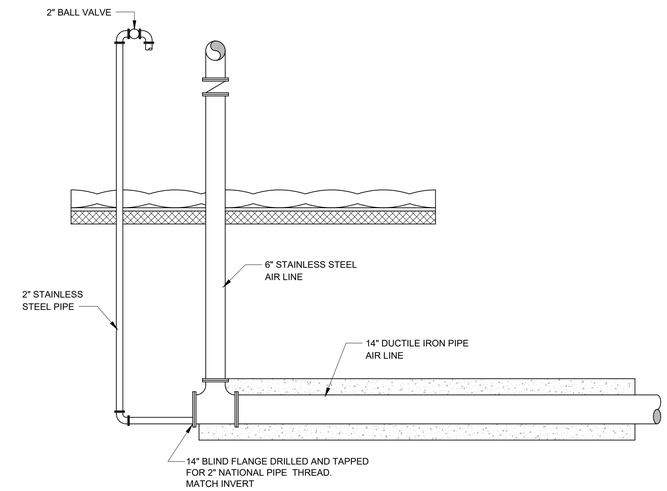

DETAIL - REQUIRED AIR LINE

NOT TO SCALE

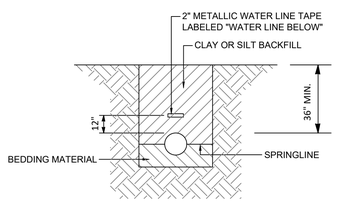

WATER LINE TRENCH DETAIL

NOT TO SCALE

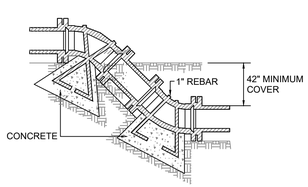

VERTICAL BENDS

NOT TO SCALE

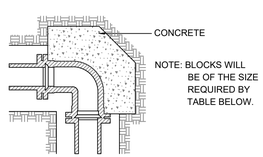

BENDS
WATER MAIN THRUST BLOCKS

NOT TO SCALE

BEARING AREA IN SQ. FT.			
NOMINAL PIPE DIAMETER (IN.)	DEAD-END OR TEE	90° BEND	45° BEND
6	2.0	2.0	2.0
8	3.0	3.0	2.0
VERTICAL BENDS			
6			14.0 (0.52)
8			27.0 (1.00)
VOLUME OF BLOCKS INCLUDING SOIL LOAD CU. FT.			

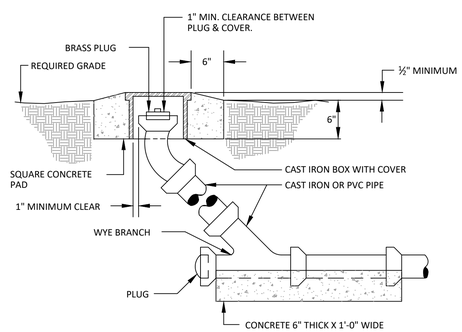

DETAIL - TYPICAL CLEANOUT

NOT TO SCALE

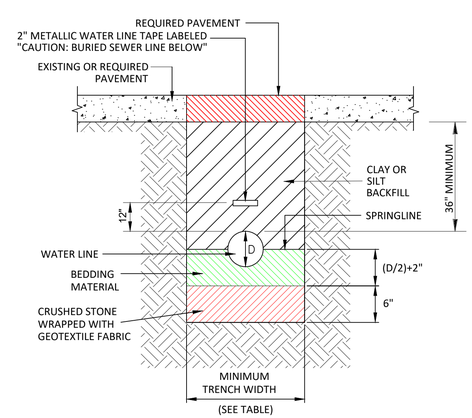

DETAIL - WATER LINE TRENCH PAVED AREAS

NOT TO SCALE

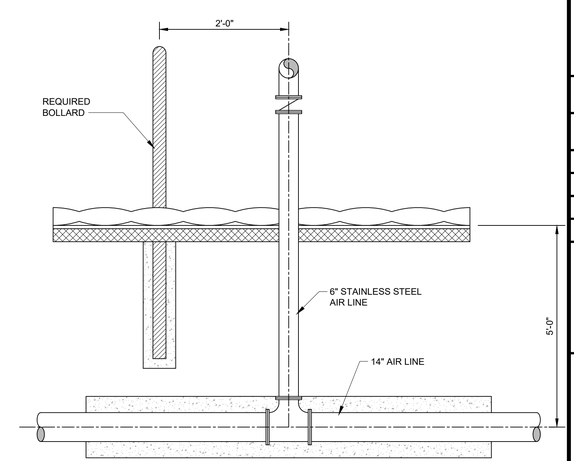

DETAIL - AIR LINE / BOLLARD

NOT TO SCALE

W. L. BURLE
ENGINEERS, P.A.
111 South Walnut Street
Greenville, MS 38701

GS#323-024 ARPA INFR. - WASTE CENT. TREATMENT
SOUTH MISSISSIPPI CORRECTIONAL INSTITUTION
LEAKESVILLE, MISSISSIPPI

Burle Proj. No.: 08194-1-0122
File Name: C-902 DETAILS - WATER.dwg
Date: 04/29/2024
Scale: 1"=30'
Drawn by: JRG
Checked: DTM
Revisions:
Revisions:
Revisions:

DETAILS - WATER

C-903
Drawing Number

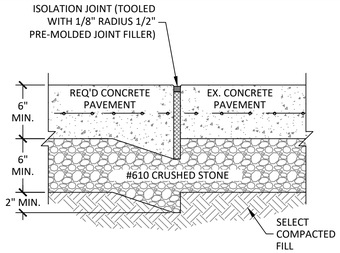

THICKENED EDGE ISOLATION JOINT

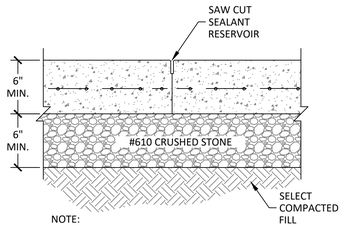

NOTE:

1. TRANSVERSE CONSTRUCTION JOINT AT 6" PAVEMENT. LOCATE AT CONTRACTION JOINT.

BUTT JOINT

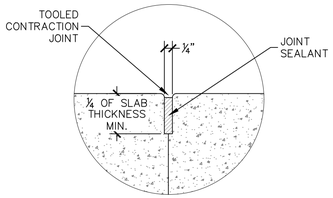

TOOLED CONTRACTION JOINT

DETAILS - CONCRETE CONSTRUCTION JOINTS DETAIL

NOT TO SCALE

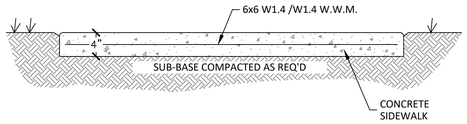

TYPICAL SIDEWALK

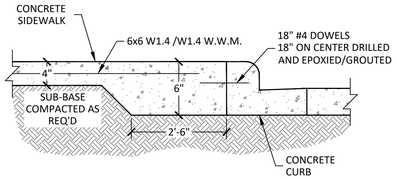

SIDEWALK W/ CURB CONNECTION

NOTE:

1. CONTRACTION JOINT SPACING SHALL NOT EXCEED WIDTH OF SIDEWALK AND SHALL BE EVENLY SPACED. CONTRACTION JOINTS SHALL BE PERPENDICULAR TO DIRECTION OF TRAVEL.

DETAIL - CONCRETE SIDEWALK

NOT TO SCALE

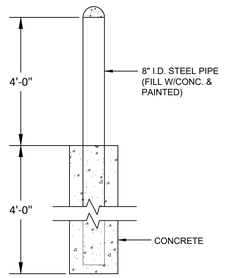

DETAIL - BOLLARD

NOT TO SCALE

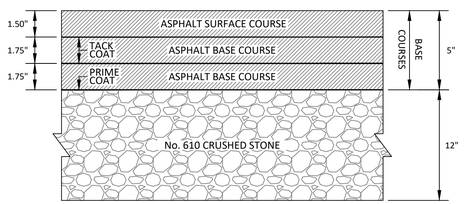

NOTES:

1. ASPHALT, PRIME COAT, AND TACK COAT SHALL BE PLACED IN ACCORDANCE WITH THE MISSISSIPPI STANDARD SPECIFICATIONS FOR ROAD AND BRIDGE CONSTRUCTION, CURRENT EDITION.
2. ASPHALT BASE COURSES SHALL BE HMA ST 12.5MM.
3. ASPHALT SURFACE COURSE SHALL BE HMA ST 9.5MM.

DETAIL - ASPHALT PAVEMENT DETAIL

NOT TO SCALE

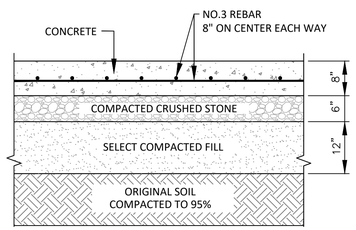

DETAIL - 8" REINFORCED CONCRETE PAVEMENT

NOT TO SCALE

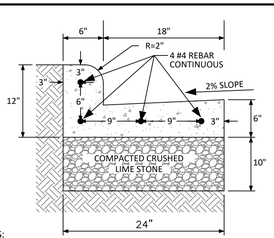

NOTES:

1. CURB AND GUTTER SHALL BE PLACED MONOLITHICALLY.
2. CURB DIMENSIONS SHALL MATCH THE DIMENSIONS OF THE EXISTING CURB ON EACH END OF THE NEW CURB.

DETAIL - CONCRETE CURB & GUTTER

NOT TO SCALE

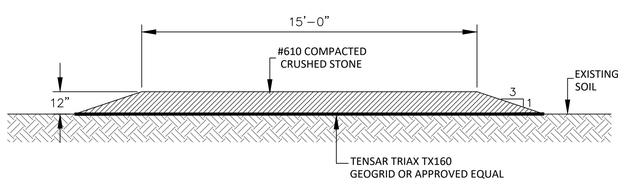

DETAIL - GRAVEL DRIVE

NOT TO SCALE

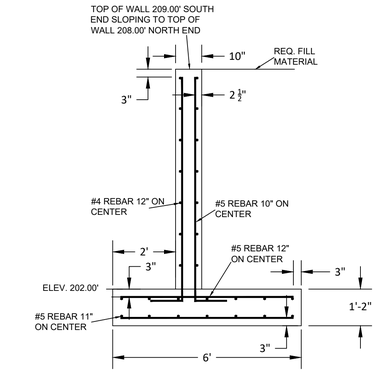

WEST CONCRETE RETAINING WALL DETAIL (1 / C-904)

N.T.S.

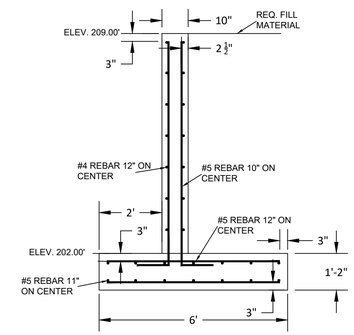

SOUTH CONCRETE RETAINING WALL DETAIL (2 / C-904)

N.T.S.

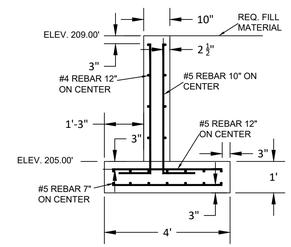

EAST CONCRETE RETAINING WALL DETAIL (3 / C-904)

N.T.S.

GENERAL NOTES:

1. ALL REBAR TO BE GRADE 60. MILL CERTIFICATION REQUIRED ON ALL REBAR INSTALLED.
2. ALL CONCRETE TO ACHIEVE 3500 PSI COMPRESSIVE STRENGTH AFTER 28 DAYS.
3. CONTRACTOR IS RESPONSIBLE FOR PROVIDING SUFFICIENT ACCESSORIES AND CHAIRS TO PLACE REINFORCEMENT, AND ALL OTHER APPURTENANCES.
4. ALL EXPOSED CONCRETE CORNERS TO HAVE ¾" CHAMFER EDGE.
5. CONTRACTOR TO PROVIDE ALL CORNER REINFORCEMENT AND LAP ALL CONTINUOUS REINFORCEMENT IN ACCORDANCE WITH BUILDING CODE REQUIREMENTS FOR STRUCTURAL CONCRETE ACI 318 BY AMERICAN CONCRETE INSTITUTE (ACI).
6. CONTRACTOR TO BACKFILL AROUND FINISHED CONCRETE STRUCTURE WITH EXISTING EXCAVATED SOIL. ALL BACKFILL SOIL AND EXISTING FOUNDATION SOILS TO BE COMPACTED TO 95% STANDARD PROCTOR ASTM D698.

W.L. BURLE
ENGINEERS, P.A.
111 South Walnut Street
Greenville, MS 38701

GS#323-024 ARPA INFR. - WASTE CENT. TREATMENT
SOUTH MISSISSIPPI CORRECTIONAL INSTITUTION
LEAKESVILLE, MISSISSIPPI

Burle Proj. No.:	08194-1-0122
File Name:	C-904 DETAILS - PAVEMENT.dwg
Date:	04/29/2024
Scale:	1"=6'
Drawn by:	MJJ/JRG
Checked:	DTM
Revisions:	
Revisions:	
Revisions:	

DETAILS - PAVEMENT

C-904
Drawing Number

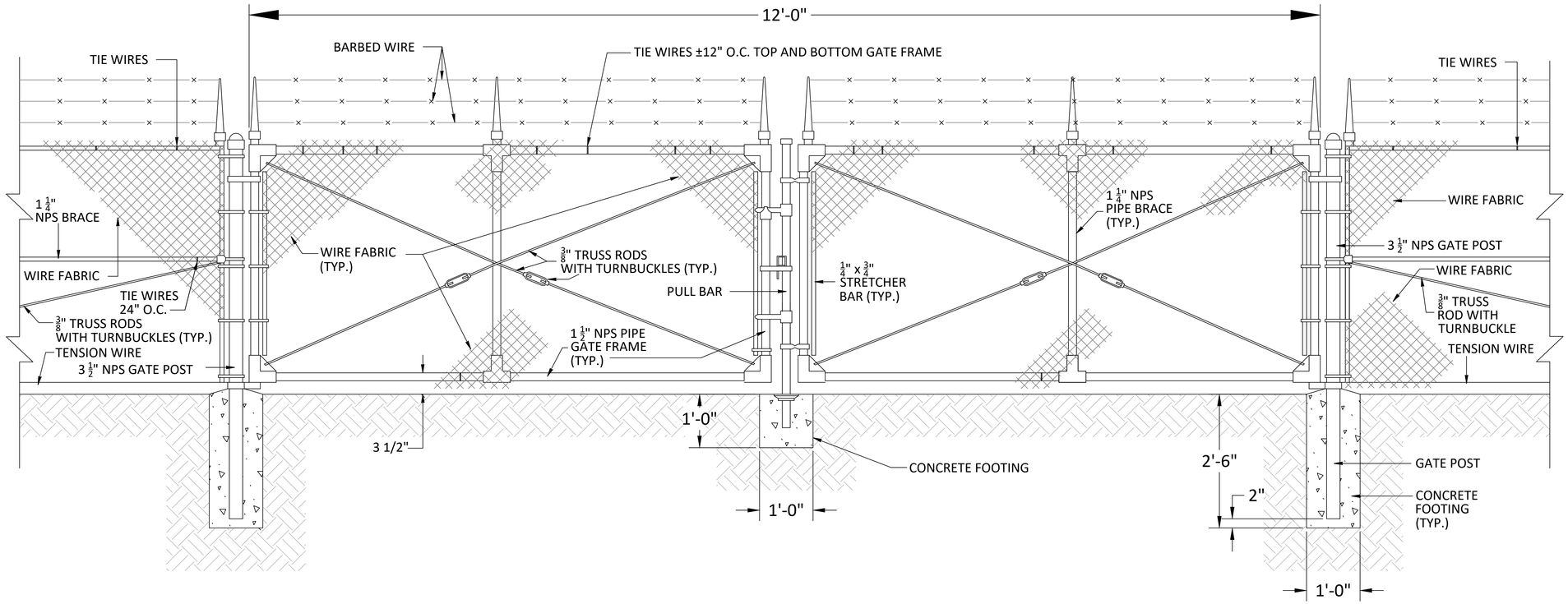

DOUBLE CHAIN LINK GATE

NOT TO SCALE

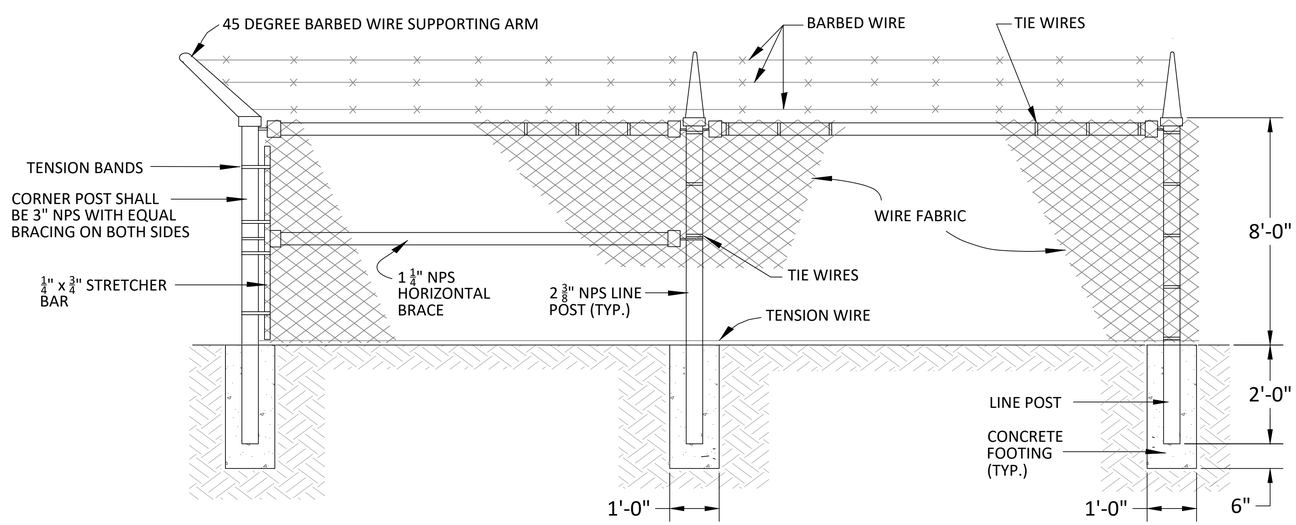

DETAIL - CHAIN LINK FENCE

NOT TO SCALE

W. L. BURLE
ENGINEERS, P.A.
111 South Walnut Street
Greenville, MS 38701

GS#323-024 ARPA INFR. - WASTE CENT. TREATMENT
SOUTH MISSISSIPPI CORRECTIONAL INSTITUTION
LEAKESVILLE, MISSISSIPPI

Burle Proj. No.:	08194-1-0122
File Name:	C-905 FENCE DETAIL.dwg
Date:	04/29/2024
Scale:	1"=30'
Drawn by:	JRG
Checked:	DTM
Revisions:	
Revisions:	
Revisions:	

DETAILS - FENCING

C-905
Drawing Number

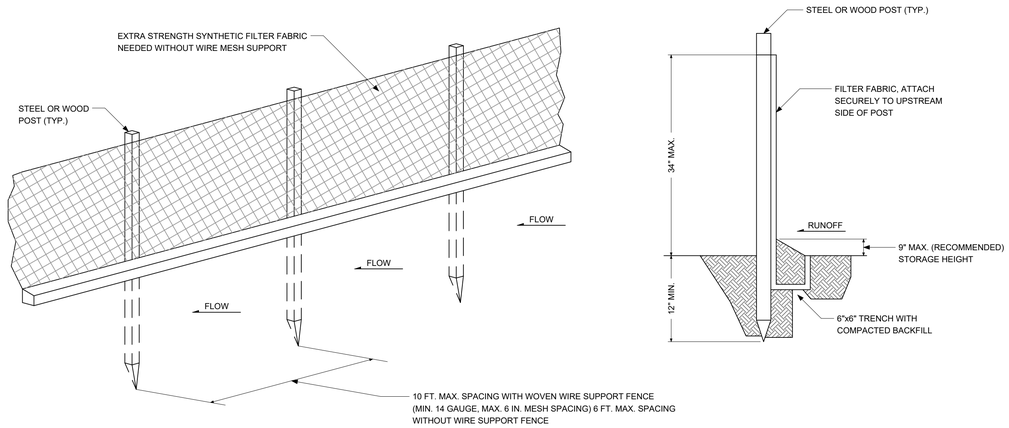

STANDARD DETAIL

SILT FENCE

NOT TO SCALE

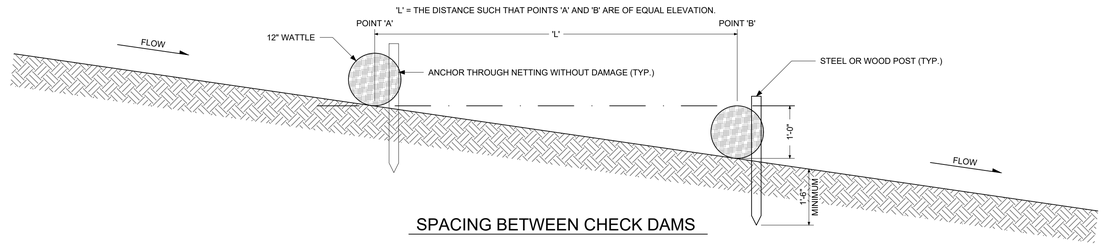

SPACING BETWEEN CHECK DAMS

SILT FENCE CHECK DAM, TYPE II

NOT TO SCALE

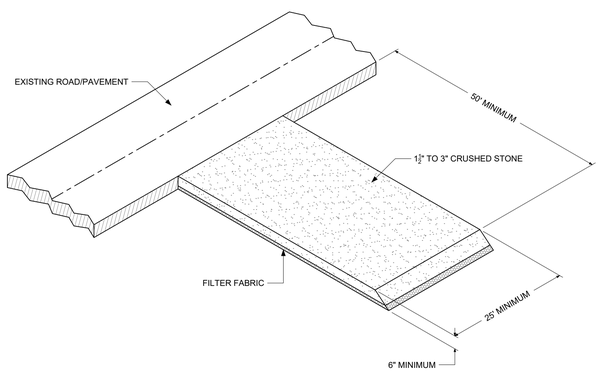

DETAIL - CONSTRUCTION ENTRANCE

NOT TO SCALE

NOTES:

1. IF GRAVEL PAD IS INSUFFICENT TO REMOVE DIRT FROM TIRES, THEN TIRES MUST BE WASHED BEFORE VEHICLE LEAVES SITE.
2. WIDEN PAD AT CONNECTION WITH ROAD TO PROVIDE FOR TURNING RADIUS OF TRUCKS.
3. SWEEP PAVED ROAD DAILY TO REMOVE DIRT AND STONE.
4. REDRESS STONE AS CONDITIONS DEMAND, DO NOT LET FILTER FABRIC BE EXPOSED.

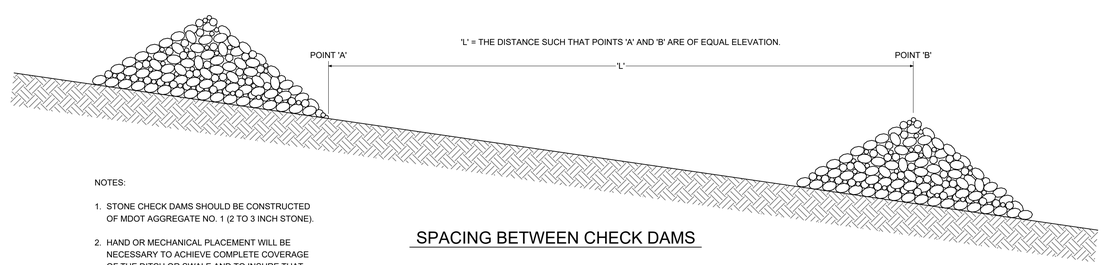

NOTES:

1. STONE CHECK DAMS SHOULD BE CONSTRUCTED OF MDOT AGGREGATE NO. 1 (2 TO 3 INCH STONE).
2. HAND OR MECHANICAL PLACEMENT WILL BE NECESSARY TO ACHIEVE COMPLETE COVERAGE OF THE DITCH OR SWALE AND TO INSURE THAT THE CENTER OF THE DAM IS LOWER THAN THE EDGES.

SPACING BETWEEN CHECK DAMS

RIPRAP CHECK DAM

NOT TO SCALE

W. L. BURLE
ENGINEERS, P.A.
111 South Walnut Street
Greenville, MS 38701

GS#323-024 ARPA INFR. - WASTE
CENT. TREATMENT
SOUTH MISSISSIPPI CORRECTIONAL INSTITUTION
LEAKESVILLE, MISSISSIPPI

Burle Proj. No.: 08194-1-0122

File Name: C-906 EROSION CONTROL.dwg

Date: 04/29/2024

Scale: 1"=30'

Drawn by: JRG

Checked: DTM

Revisions:

Revisions:

Revisions:

DETAIL - EROSION CONTROL

C-906

Drawing Number

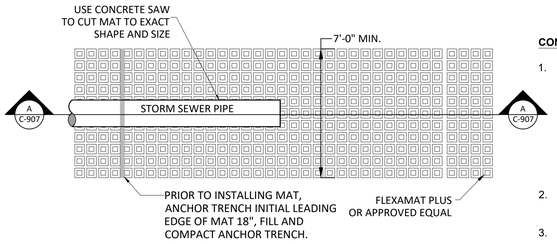

01 STORM SEWER OUTFALL - DETAIL
NOT TO SCALE

CONSTRUCTION NOTES:

1. GRADE OUTFALL AREA SO THAT WATER WILL FLOW DOWN THE CENTER OF THE CHANNEL AND BE CONTAINED TO THE CHANNEL. ALL SUBGRADE SURFACES PREPARED FOR PLACEMENT OF MATS SHALL BE SMOOTH AND FREE OF ALL ROCKS, STICKS, ROOTS, OTHER PROTRUSIONS, OR DEBRIS OF ANY KIND. THE PREPARED SURFACE SHALL PROVIDE A FIRM UNYIELDING FOUNDATION FOR THE MATS WITH NO SHARP OR ABRUPT BREAKS IN THE GRADE .
2. APPLY SEED DIRECTLY TO THE PREPARED SOIL PRIOR TO FLEXAMAT INSTALLATION. USE SEED PER PROJECT SPECIFICATIONS.
3. A CONCRETE SAW SHALL BE USED TO CUT THE MAT TO EXACT SIZE AND SHAPE.

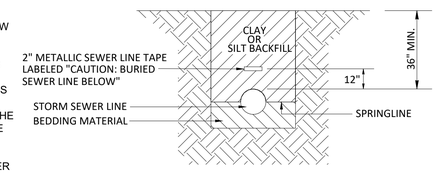

02 STORM SEWER LINE TRENCH DETAIL
NOT TO SCALE

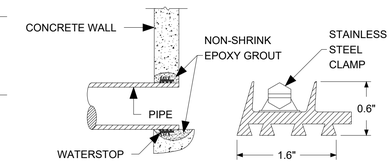

03 PIPE WATERSTOP DETAIL
NOT TO SCALE

NOTES:

1) STANDARD PRECAST CONCRETE MANHOLE SHALL COMPLY WITH ASTM C478.
2) ALL PRECAST MANHOLE SECTIONS SHALL BE COATED WITH 20 MIL THICKNESS COAL TAR EPOXY.
3) ALL JOINTS SHALL BE GROUTED INSIDE AND OUTSIDE. JOINT MATERIAL SHALL BE PREFORMED FLEXIBLE MASTIC AND SHALL COMPLY WITH ASTM C 990.
4) ALL PIPE ENTERING MANHOLES SHALL BE FITTED WITH WATERSTOP.

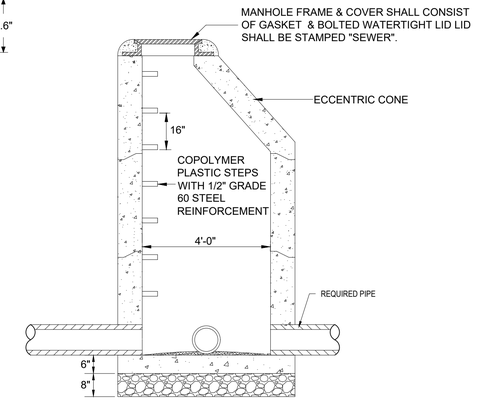

05 STORM SEWER MANHOLE DETAIL
NOT TO SCALE

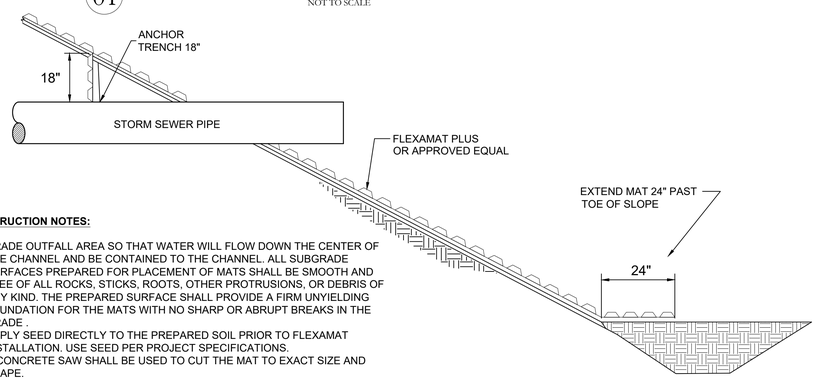

CONSTRUCTION NOTES:

1. GRADE OUTFALL AREA SO THAT WATER WILL FLOW DOWN THE CENTER OF THE CHANNEL AND BE CONTAINED TO THE CHANNEL. ALL SUBGRADE SURFACES PREPARED FOR PLACEMENT OF MATS SHALL BE SMOOTH AND FREE OF ALL ROCKS, STICKS, ROOTS, OTHER PROTRUSIONS, OR DEBRIS OF ANY KIND. THE PREPARED SURFACE SHALL PROVIDE A FIRM UNYIELDING FOUNDATION FOR THE MATS WITH NO SHARP OR ABRUPT BREAKS IN THE GRADE .
2. APPLY SEED DIRECTLY TO THE PREPARED SOIL PRIOR TO FLEXAMAT INSTALLATION. USE SEED PER PROJECT SPECIFICATIONS.
3. A CONCRETE SAW SHALL BE USED TO CUT THE MAT TO EXACT SIZE AND SHAPE.

A C-907 SECTION STORM SEWER OUTFALL
NOT TO SCALE

NOTES:

1. ALL REBAR TO BE GRADE 60. MILL CERTIFICATION REQUIRED ON ALL REBAR INSTALLED.
2. REBAR LAP REQUIREMENTS AND BEND REQUIREMENTS PER AMERICAN CONCRETE INSTITUTE (ACI) CODES.
3. THE "D" SHOWN ON THE DETAILS OF THIS DRAWING INDICATES THE OUTSIDE DIAMETER OR SPAN OF THE EXISTING PIPE OR THE PIPE TO BE INSTALLED AS THE PIPE INTERSECTS THE INTERIOR WALL OF THE INLET.

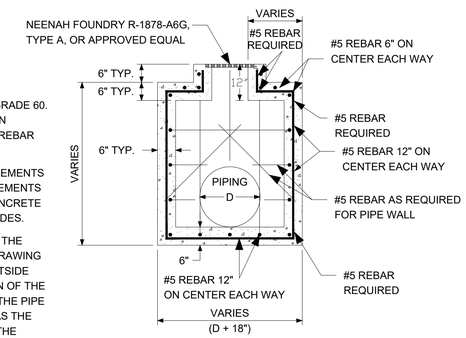

04 SURFACE INLET DETAIL
NOT TO SCALE

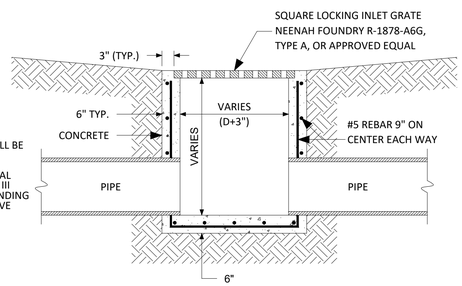

NOTES:

1) BEDDING MATERIAL SHALL BE CLASS I, II, OR III.
2) INITIAL BACKFILL MATERIAL SHALL BE CLASS I, II, OR III IN THE PIPE ZONE EXTENDING NOT LESS THAN 6" ABOVE CROWN OF PIPE.

06 PRE-CAST SURFACE INLET DETAIL
NOT TO SCALE

DRAIN BASIN

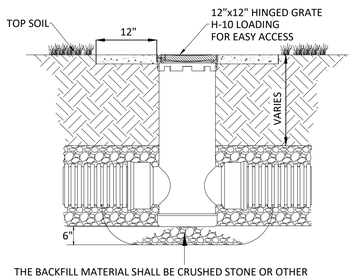

THE BACKFILL MATERIAL SHALL BE CRUSHED STONE OR OTHER GRANULAR MATERIAL MEETING THE REQUIREMENTS OF CLASS I, CLASS II, OR CLASS III MATERIAL AS DEFINED IN ASTM D2321. BEDDING & BACKFILL FOR SURFACE DRAINAGE INLETS SHALL BE PLACED & COMPACTED UNIFORMLY IN ACCORDANCE WITH ASTM D2321.

07 INLET SURFACE DRAIN DETAIL
NOT TO SCALE

W. L. BURLE
ENGINEERS, P.A.
111 South Walnut Street
Greenville, MS 38701

GSH323-024 ARPA INFR. - WASTE CENT. TREATMENT
SOUTH MISSISSIPPI CORRECTIONAL INSTITUTION
LEAKESVILLE, MISSISSIPPI

Burle Proj. No.: 08194-1-0122
File Name: Details Stormwater.dwg
Date: 04/29/2024
Scale: 1"= 30'
Drawn by: JRW
Checked: DTM
Revisions:
Revisions:
Revisions:

DETAILS - STORM WATER

C-907
Drawing Number

LEGEND

WP 1 G	DUPLEX RECEPTACLE, 125 VOLT, "WP" INDICATES WEATHERPROOF DUPLEX "IN-USE" RECEPTACLE, "G" INDICATES GROUND FAULT INTERRUPTER TYPE (GFCI), "1" INDICATES CIRCUIT NO.
	DUPLEX RECEPTACLE, MOUNTED ABOVE COUNTERTOP.
J	JUNCTION BOX, NEMA 4X STAINLESS STEEL.
PP-A	PANELBOARD, 600 VAC MAX, SURFACE MOUNTED. PANEL "PP-A" INDICATED. SEE PANELBOARD SCHEDULES.
RP-A	PANELBOARD, 240 VAC MAX, SURFACE MOUNTED. PANEL "RP-A" INDICATED. SEE PANELBOARD SCHEDULES.
	DISCONNECT SWITCH, FUSED OR NON-FUSED (SEE MECHANICAL EQUIPMENT SCHEDULES)
	BRANCH CIRCUIT CONCEALED BELOW GRADE. DASHES INDICATE NUMBER OF CONDUCTORS (#12 AWG UNLESS OTHERWISE INDICATED). L INDICATES TO PULL GREEN GROUNDING CONDUCTOR.
	BRANCH CIRCUIT, EXPOSED. DASHES INDICATE NUMBER OF CONDUCTORS (#12 AWG UNLESS OTHERWISE INDICATED). L INDICATES TO PULL GREEN GROUNDING CONDUCTOR.
	BRANCH CIRCUIT, CONCEALED. DASHES INDICATE NUMBER OF CONDUCTORS (#12 AWG UNLESS OTHERWISE INDICATED). L INDICATES TO PULL GREEN GROUNDING CONDUCTOR.
A-1,3	HOMERUN TO PANEL, PANEL DESIGNATION, CIRCUIT NUMBER(S). NUMBER OF CIRCUITS IN ONE CONDUIT INDICATED BY NUMBER OF ARROWS. DASHES INDICATE NUMBER OF CONDUCTORS (#12 AWG UNLESS OTHERWISE INDICATED). L INDICATES TO PULL GREEN GROUNDING CONDUCTOR. SOLID, DASHED, OR DASHED-DOT LINES INDICATE CONCEALED, EXPOSED, OR CONCEALED BELOW GRADE CONDUIT AS SHOWN FOR BRANCH CIRCUITS ABOVE.
FO FO	UNDERGROUND FIBER OPTIC CABLE FOR SCADA SYSTEM
C C	CONTROL CIRCUIT, EXPOSED.
CC CC	CONTROL CIRCUIT, CONCEALED BELOW GRADE.
C CTU	CONTROL CIRCUIT, EXPOSED, HOMERUN TO CTU.

MISCELLANEOUS

PB	PULL BOX, ELECTRICAL POWER. SEE DETAIL ON SHEET E-501.
??? ##	EQUIPMENT MARK. SEE SCHEDULES FOR ELECTRICAL CONNECTION INFORMATION
2	CONDUIT AND CONDUCTOR TAG. REFER TO SCHEDULES.

APPLICABLE CODES/STANDARDS

1. NATIONAL ELECTRICAL CODE (NFPA 70)

ABBREVIATIONS

ATS	AUTOMATIC TRANSFER SWITCH
C	CONDUIT
CTU	SCADA CENTRAL TERMINAL UNIT
EX	EXISTING
FVNR	FULL VOLTAGE NON-REVERSING STARTER
G	GROUND
GFCI	GROUND FAULT CIRCUIT INTERRUPTER
LSIG	LONG TERM, SHORT TERM, INSTANTANEOUS, GROUND FAULT
NFDS	NON-FUSED DISCONNECT SWITCH
RTU	SCADA REMOTE TERMINAL UNIT
RVSS	REDUCED VOLTAGE SOLID STATE STARTER
SS	STAINLESS STEEL
TVSS	TRANSIENT VOLTAGE SURGE SUPPRESSION
WP	WEATHERPROOF

DRAWING INDEX

SHEET NO.	SHEET INDEX
E-101	ELECTRICAL LEGEND, DRAWING INDEX, & NOTES
E-201	OVERALL ELECTRICAL SITE PLAN
E-202	OVERALL SCADA SYSTEM PLAN
E-203	POWER RISER DIAGRAM
E-205	ELECTRICAL SCHEDULES
E-206	ELECTRICAL SCHEDULES
E-301	ENLARGED PLAN - HEADWORKS
E-304	ELECTRICAL DETAILS
E-305	ELECTRICAL DETAILS
E-310	ENLARGED PLAN - INFLUENT PUMP STATION
E-404	ENLARGED PLAN - CLARIFIERS
E-501	ENLARGED PLAN - FILTERS & BLOWERS
E-701	ENLARGED PLAN - UV DISINFECTION SYSTEM
E-801	ENLARGED PLAN - EFFLUENT PUMP STATION

GENERAL NOTES

1. EXISTING AND PROPOSED SERVICE VOLTAGE ARE 277/480V, 3-PHASE, 4-WIRE.
2. ALL WORK SHOWN ON THESE DRAWINGS IS DIAGRAMMATIC. CONTRACTOR SHALL COORDINATE HIS WORK WITH OTHER TRADES. VERIFY ALL EQUIPMENT LOCATIONS BEFORE COMMENCING WORK. COORDINATE ALL WORK WITH PROJECT DRAWINGS.
3. WORKING SPACES SHALL NOT BE LESS THAN SPECIFIED PER NFPA 70 FOR ALL VOLTAGES SPECIFIED.
4. WIRE AND CONDUIT SIZES AND QUANTITIES FOR FEEDERS AND BRANCH CIRCUITS WHICH ARE SHOWN ON THE POWER RISER DIAGRAM APPLY TO PLAN SHEETS.
5. CONDUIT HOMERUNS NOT MARKED SHALL BE CONSIDERED 2#12 & 1#12 GROUND IN 3/4" MINIMUM CONDUIT.
6. ALL 20 AMPERE, SINGLE POLE CIRCUITS SHALL BE PROVIDED WITH SEPARATE FULL SIZE NEUTRAL.
7. ALL CONDUITS SHALL BE PROVIDED WITH AN EQUIPMENT GROUNDING CONDUCTOR SIZED PER NFPA 70.
8. ALL CONDUITS PASSING THROUGH CONCRETE FLOORS OR WALLS BELOW GRADE SHALL BE INSTALLED WITH CABLE SEAL FITTINGS.
9. CONTRACTOR SHALL COORDINATE MOUNTING EQUIPMENT MOUNTING SUPPORTS AND ELEVATIONS WITH EQUIPMENT FURNISHED.
10. EQUIPMENT LOCATIONS SHALL BE AS CLOSE AS PRACTICAL TO LOCATIONS SHOWN ON THE DRAWINGS. EXACT STUBOUT LOCATIONS SHALL BE DETERMINED BY CONTRACTOR BASED ON THE EQUIPMENT MANUFACTURER'S CERTIFIED DRAWINGS OF THE RESPECTIVE EQUIPMENT. CONDUITS SHALL BE PLACED AS REQUIRED BY EQUIPMENT DRAWINGS.
11. CONTRACTOR SHALL FURNISH, INSTALL, AND SIZE ALL SLEEVES, HOLES, CORES, PATCHING, SLOTS, ANCHORS, BRACKETS, SUPPORTS, JUNCTION BOXES, PULL BOXES AND OTHER APPURTENANCES NECESSARY TO EXECUTE THE WORK/ SOME OF THESE ITEMS MAY BE SHOWN ON THE DRAWINGS FOR CLARITY OR DESIGN PREFERENCE.
12. THE NUMBER, SIZE AND TYPE OF POWER AND CONTROL CONDUCTORS AND CABLES SHOWN ON THESE DRAWINGS ARE BASED ON DESIGN CRITERIA. THE CONTRACTOR SHALL MAKE ADJUSTMENTS WHERE NECESSARY TO REFLECT THE REQUIREMENTS OF THE ACTUAL EQUIPMENT TO BE INSTALLED PER APPROVED EQUIPMENT SHOP DRAWINGS.
13. SEAL CONDUITS, INCLUDING SPARE CONDUITS AT BUILDING ENTRANCES AND AT OUTDOOR TERMINATIONS FOR EQUIPMENT AND COOLER ENTRANCES WITH A SUITABLE COMPOUND TO PREVENT THE ENTRANCE OF MOISTURE AND GASES.
14. PRIOR TO ANY EXCAVATION, THE CONTRACTOR SHALL DETERMINE THE LOCATION OF ALL EXISTING UNDERGROUND UTILITIES AND STRUCTURES. OBTAIN LOCATION DRAWINGS AND OTHER ASSISTANCE FROM THE VARIOUS LOCAL UTILITY DEPARTMENTS AND OTHER APPLICABLE AGENCIES, AND MAKE OTHER INVESTIGATIONS AS REQUIRED TO ACCOMPLISH THIS.
15. UNDERGROUND CONDUITS SHALL NOT BE INSTALLED LESS THAN 36" BELOW FINISHED GRADE. GREATER DEPTHS SHALL BE PROVIDED WHERE INDICATED ON THE DRAWINGS.

W. L. BURLE
ENGINEERS, P.A.
111 South Walnut Street
Greenville, MS 38701

JOSEPH W. BOWMAN
LICENSED PROFESSIONAL ENGINEER
25322
STATE OF MISSISSIPPI
04/29/2024

GS#323-024 ARPA INFR. - WASTE CENT. TREATMENT
SOUTH MISSISSIPPI CORRECTIONAL INSTITUTE
LEAKESVILLE, MISSISSIPPI

Burle Proj. No.: 08194-1-0122
File Name: E-101 ELECTRICAL LEGEND, NOTES, INDEX.DWG
Date: 04/29/2024
Scale: AS SHOWN
Drawn by: JWB
Checked: JWB
Revisions:
Revisions:
Revisions:

ATWELL & GENT
ELECTRICAL & CONSULTING ENGINEERS
A&G PROJECT #324F6012

ELECTRICAL LEGEND, DRAWING INDEX, AND NOTES

E-101

Drawing Number

GENERAL NOTES

1. REFER TO SHEET E-202 FOR SCADA SYSTEM PLAN.
2. REFER TO SHEETS E-301, E-401, E-501, E-701, & E-801 FOR ENLARGED PLANS.
3. REFER TO SHEET E-501 FOR DUCTBANK AND ELECTRICAL DETAILS.
4. REFER TO SHEET E-203 & E-303 FOR POWER RISER DIAGRAMS.
5. REFER TO SPECIFICATIONS FOR CONDUIT AND CONDUCTOR REQUIREMENTS.

NUMBERED NOTES

1. REMOVE EXISTING AERATOR CONTROL PANEL INCLUDING FEEDER CONDUCTORS BACK TO SOURCE. CUT, CAP BELOW GRADE, AND ABANDON CONDUIT IN PLACE AT CONTROL PANEL AND AT SOURCE.
2. RELOCATE AERATORS FROM EXISTING LOCATION TO PROPOSED LOCATION AS INDICATED. PROVIDE NEW CONTROL PANEL "CP-AER" AT LOCATION INDICATED. PROVIDE FEEDERS AND SHORE MOUNTED DISCONNECTS PER EQUIPMENT SCHEDULE.
3. REMOVE EXISTING SERVICE CONDUCTORS ONCE NEW SERVICE IS INSTALLED AND NEW FEEDER TO EXISTING PANEL "DPA" IS INSTALLED. CUT, CAP BELOW GRADE, AND ABANDON CONDUIT IN PLACE AT EXISTING PANEL "DPA" AND AT EXISTING POWER COMPANY TRANSFORMER SERVICE POLE. COORDINATE POWER OUTAGES FOR TRANSFER TO NEW SERVICE WITH OWNER'S REPRESENTATIVES AND THE POWER COMPANY.
4. REMOVE EXISTING AUTOMATIC TRANSFER SWITCH "ATS-DPA". REMOVE EXISTING FEEDER AND CONTROL CONDUCTORS FROM "ATS-DPA" TO EXISTING GENERATOR. CUT, CAP BELOW GRADE, AND ABANDON CONDUIT IN PLACE AT "ATS-DPA" AND AT EXISTING GENERATOR.
5. REMOVE EXISTING GENERATOR. MODIFY AND EXTEND PAD TO RECEIVE NEW GENERATOR "A", FEEDER, CONTROL CONDUITS, AND BLOCK HEATER & BATTERY CHARGER BRANCH CIRCUITS. REFER TO SHEET E-304 FOR TYPICAL GENERATOR PAD FOUNDATION REQUIREMENTS.
6. CORDINATE RISER CONDUITS AND CONDUCTOR REQUIREMENTS WITH POWER COMPANY PRIOR TO ROUGH-IN. VERIFY LOCATION OF TRANSFORMER SERVICE POLE WITH POWER COMPANY.
7. PROVIDE NEW BULLHORN (TWO IN-LINE TYPE) BRACKET MOUNTED ON EXISTING GALVANIZED POLE. BRACKET SHALL BE SIMILAR TO EXISTING BRACKETS. VERIFY TENON FOR ATTACHMENT TO EXISTING POLE. TYPICAL BULLHORN BRACKET SHALL BE LITHONIA #BS28-T35-TD20-GALV.
8. UNDERGROUND FEEDER FOR PANEL "DPB" AT HEADWORKS. REFER TO SHEET E-203 FOR CONDUIT AND WIRE SCHEDULE.
9. PROVIDE SEPARATE COMMUNICATIONS PULL BOX AT LOCATIONS INDICATED.

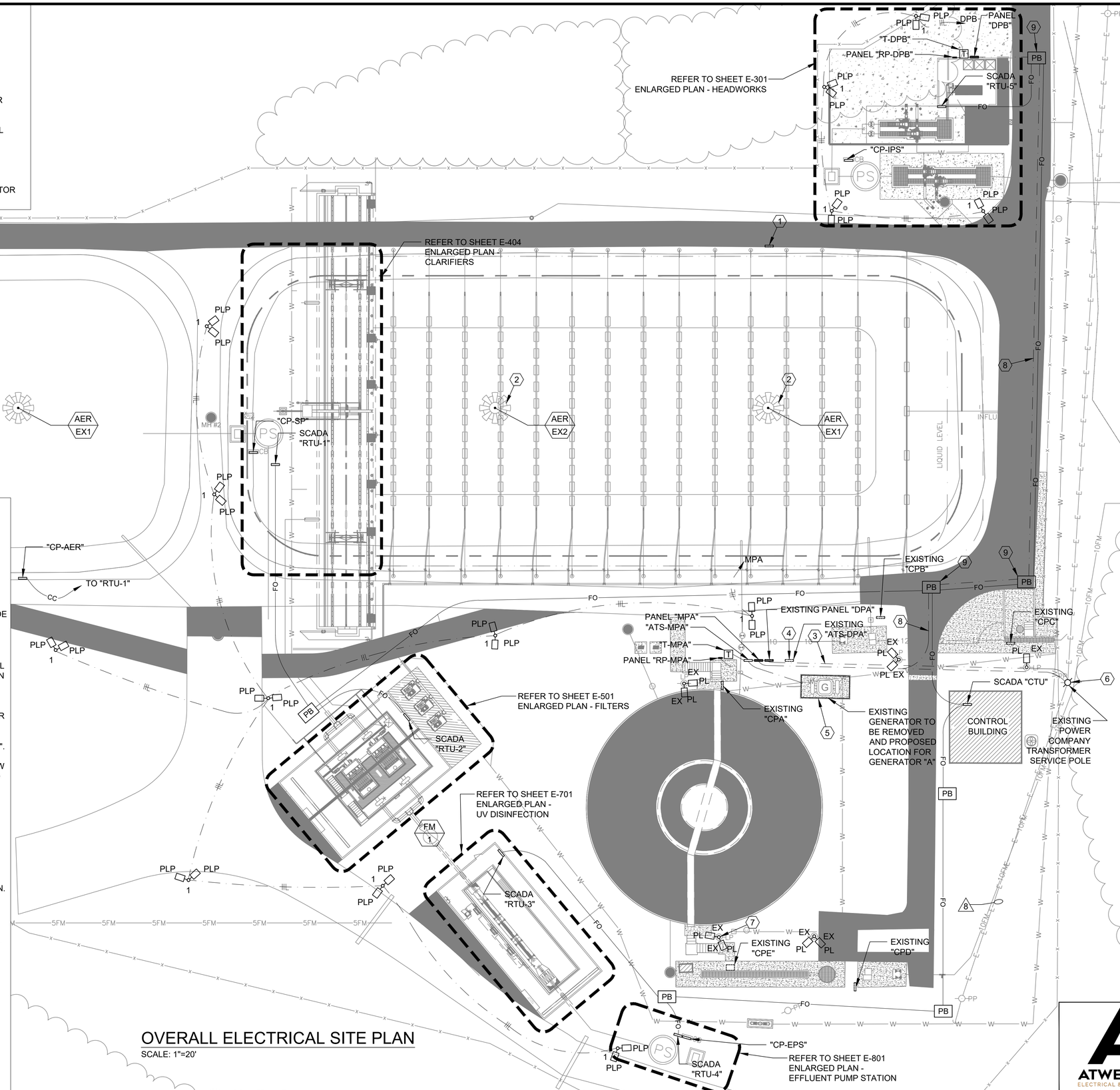

OVERALL ELECTRICAL SITE PLAN

SCALE: 1"=20'

ATWELL & GENT
ELECTRICAL & CONSULTING ENGINEERS
A&G PROJECT #324F6012

W. L. BURLE
ENGINEERS, P.A.
111 South Walnut Street
Greenville, MS 38701

JOSEPH W. BOWMAN
LICENSED PROFESSIONAL ENGINEER
25322
STATE OF MISSISSIPPI
04/29/2024

GS#323-024 ARPA INFR. - WASTE CENT. TREATMENT
SOUTH MISSISSIPPI CORRECTIONAL INSTITUTE
LEAKESVILLE, MISSISSIPPI

Burle Proj. No.:	08194-1-0122
File Name:	E-201 OVERALL ELECTRICAL SITE PLAN.DWG
Date:	04/29/2024
Scale:	AS SHOWN
Drawn by:	JWB
Checked:	JWB
Revisions:	
Revisions:	
Revisions:	

OVERALL ELECTRICAL SITE PLAN

E-201

Drawing Number

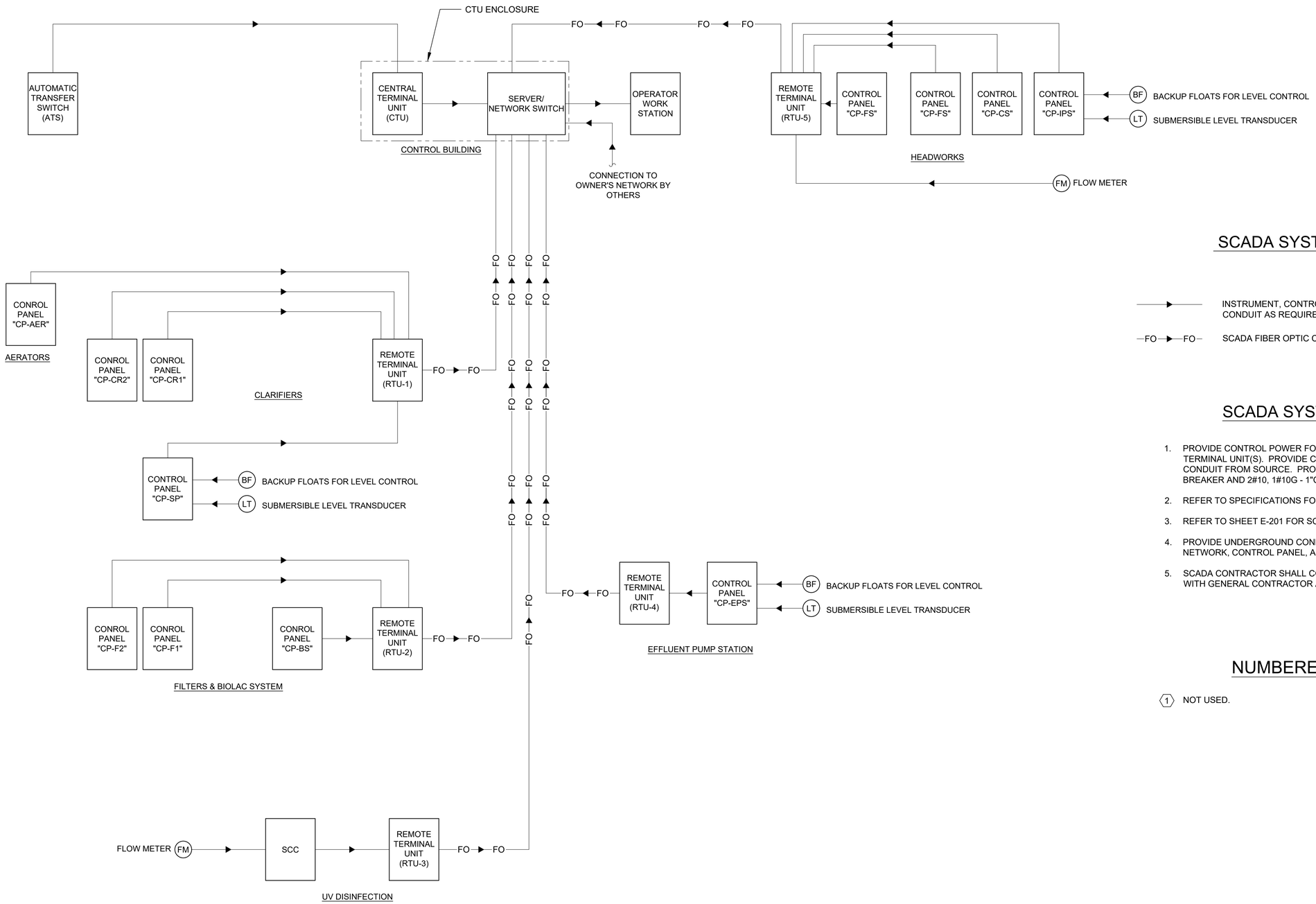

OVERALL SCADA SYSTEM PLAN

SCALE: NONE

SCADA SYSTEM LEGEND

INSTRUMENT, CONTROLS, OR COMMUNICATIONS CABLING IN CONDUIT AS REQUIRED.

—FO—▶—FO— SCADA FIBER OPTIC COMMUNICATIONS CABLE.

SCADA SYSTEM NOTES

1. PROVIDE CONTROL POWER FOR CENTRAL TERMINAL UNIT AND REMOTE TERMINAL UNIT(S). PROVIDE CIRCUIT BREAKERS, CONDUCTORS, AND CONDUIT FROM SOURCE. PROVIDE A MINIMUM 20 AMP, 1-POLE CIRCUIT BREAKER AND 2#10, 1#10G - 1"C. FOR EACH BRANCH CIRCUIT.
2. REFER TO SPECIFICATIONS FOR SCADA SYSTEM REQUIREMENTS.
3. REFER TO SHEET E-201 FOR SCADA SYSTEM OVERALL PLAN.
4. PROVIDE UNDERGROUND CONDUIT AND CABLING FOR ALL SCADA SYSTEM NETWORK, CONTROL PANEL, AND INSTRUMENT CONNECTIONS.
5. SCADA CONTRACTOR SHALL COORDINATE ROUTING OF ALL SITE CONDUITS WITH GENERAL CONTRACTOR AND ELECTRICAL CONTRACTOR.

NUMBERED NOTES

(1) NOT USED.

W. L. BURLE
ENGINEERS, P.A.
111 South Walnut Street
Greenville, MS 38701

JOSEPH W. BOWMAN
LICENSED PROFESSIONAL ENGINEER
25322
STATE OF MISSISSIPPI
04/29/2024

GS#323-024 ARPA INFR. - WASTE CENT. TREATMENT
SOUTH MISSISSIPPI CORRECTIONAL INSTITUTE
LEAKESVILLE, MISSISSIPPI

Burle Proj. No.: 08194-1-0122
File Name: E-202 OVERALL SCADA SYSTEM PLAN.DWG
Date: 04/29/2024
Scale: AS SHOWN
Drawn by: JWB
Checked: JWB
Revisions:
Revisions:
Revisions:

ATWELL & GENT
ELECTRICAL & CONSULTING ENGINEERS
A&G PROJECT #324F6012

OVERALL SCADA SYSTEM PLAN

E-202
Drawing Number

CONDUIT AND WIRE SCHEDULE - POWER RISER DIAGRAM

TAG NO.	CONDUCTORS	CONDUIT	FROM	TO	NOTES
1	EXISTING 2 RUNS EACH OF 3#350, 1#1/0 N TO BE REMOVED	(2) 3"	EXISTING TRANSFORMER SERVICE POLE	EXISTING "ATS-DPA"	
2	EXISTING FEEDERS TO REMAIN	(5) 1-2"	EXISTING MAIN PANEL "DPA"	EXISTING CONTROL PANELS "CPA", "CPB", "CPC", "CPD", & "CPE"	
3	EXISTING 2 RUNS EACH OF 3#350, 1#1/0 N TO BE REMOVED	(2) 3"	EXISTING "ATS-DPA"	EXISTING GENERATOR "DPA"	
4	EXISTING 2 RUNS EACH OF 3#350, 1#1/0 N TO BE REMOVED	(2) 3"	EXISTING "ATS-DPA"	EXISTING MAIN PANEL "DPA"	
5	4 RUNS EACH OF 4#500	(4) 4"	EXISTING TRANSFORMER SERVICE POLE	"ATS-MPA"	
6	#2/0G	1"	MAIN PANEL "MPA" SYSTEM GROUND	EXISTING MAIN PANEL "DPA" SYSTEM GROUND	
7	2 RUNS EACH OF 4#350, 1#2G	(2) 3"	MAIN PANEL "MPA"	EXISTING PANEL "DPA"	
8	4 RUNS EACH OF 4#500, 1#4/0G	(4) 4"	"ATS-MPA"	MAIN PANEL "MPA"	
9	4 RUNS EACH OF 4#500, 1#4/0G & GENERATOR CONTROL CONDUCTORS	(4) 4" (2) 1"	"ATS-MPA"	GENERATOR "GEN-MPA"	
10	3#1/0, 1#6G	1 1/2"	MAIN PANEL "MPA"	TRANSFORMER "T-MPA"	150A
11	4#250, 1#4G	2 1/2"	TRANSFORMER "T-MPA"	PANEL "RP-MPA"	
12	TWO SETS OF 2#10, 1#10G	(2) 1"	PANEL "RP-MPA"	GENERATOR "GEN-MPA" BLOCK HEATER & BATTERY CHARGER CKTS	
13	2 RUNS EACH OF 4#350, 1#2G	(2) 3"	MAIN PANEL "MPA"	CONTROL PANEL "CP-BS"	600A
14	3#10, 1#10G	1"	MAIN PANEL "MPA"	CONTROL PANEL "CP-F1"	20A
15	3#10, 1#10G	1"	MAIN PANEL "MPA"	CONTROL PANEL "CP-F2"	20A

CONDUIT AND WIRE SCHEDULE - POWER RISER DIAGRAM

TAG NO.	CONDUCTORS	CONDUIT	FROM	TO	NOTES
16	3#250, 1#4G	2 1/2"	MAIN PANEL "MPA"	EFFLUENT PUMP STATION "CP-EPS"	250A
17	3#8, 1#10G	1"	MAIN PANEL "MPA"	AERATOR CONTROL PANEL "CP-AER"	40A 2-7.5HP
18	4#10, 1#10G	1"	MAIN PANEL "MPA"	UV SYSTEM "PDC-1A"	20A (8A)
19	4#10, 1#10G	1"	MAIN PANEL "MPA"	UV SYSTEM "PDC-1B"	20A (8A)
20	4#10, 1#10G	1"	MAIN PANEL "MPA"	UV SYSTEM "PDC-1C"	20A (8A)
21	4#10, 1#10G	1"	MAIN PANEL "MPA"	UV "HSC"	15A (3A)
22	4#500, 1#2G	4"	MAIN PANEL "MPA"	PANEL "DPB"	200A
23	3#10, 1#10G	1"	PANEL "DPB"	TRANSFORMER "T-DPB"	30A
24	4#6, 1#10G	1"	TRANSFORMER "T-DPB"	PANEL "RP-DPB"	
25	4#6, 1#10G	1"	PANEL "RP-DPB"	CONTROL PANEL "FS"	60A
26	4#10, 1#10G	1"	PANEL "RP-DPB"	CONTROL PANEL "CS"	30A
27	4#4, 1#8G	1 1/2"	PANEL "RP-DPB"	CONTROL PANEL "IPS"	80A 3-15HP

GENERAL NOTES:

1. REFER TO SHEET E-100 FOR OVERALL ELECTRICAL SITE PLAN.
2. REFER TO SHEET E-301, E-404, E-501, & E-701 FOR ENLARGED PLANS.
3. REFER TO SHEET E-205 FOR MECHANICAL EQUIPMENT SCHEDULE.
4. REFER TO SHEET E-206 FOR PANELBOARD SCHEDULES.

TRANSFORMER SCHEDULE

MARK	SIZE	PRIMARY VOLTAGE	SECONDARY VOLTAGE	PHASE	k RATING	NOTES
T-MPA	75 KVA	480V	120/208	3	13	NEMA 3R
T-DPB	15 KVA	480V	120/208	3	13	NEMA 3R

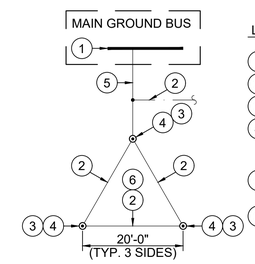

LEGEND - GROUND SYSTEM

1. GROUND BUS
2. #2/0 BARE CU GROUND CONDUCTOR
3. EXOTHERMIC CONNECTION
4. 3/4" X 10'-0" LONG COPPER CLAD STEEL COPPERWELD GROUND ROD DRIVEN WITH TOP 1'-0" BELOW GRADE
5. #2/0 CU GROUND CONDUCTOR (INSULATED) IN 1" CONDUIT
6. QUANTITY OF REQUIRED GROUND RODS TO BE DETERMINED PER SITE CONDITIONS

GROUNDING ELECTRODE SYSTEM DETAIL

SCALE: NONE

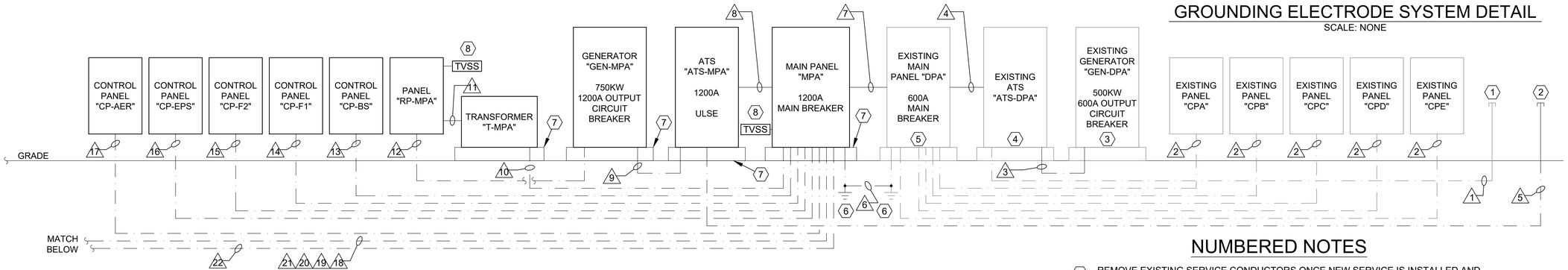

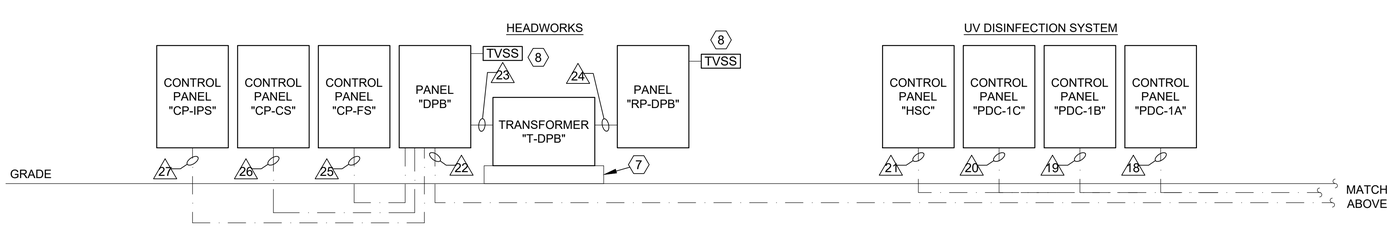

POWER RISER DIAGRAM

SCALE: NONE

NUMBERED NOTES

1. REMOVE EXISTING SERVICE CONDUCTORS ONCE NEW SERVICE IS INSTALLED AND NEW FEEDER TO EXISTING PANEL "DPA" IS INSTALLED. CUT, CAP BELOW GRADE, AND ABANDON CONDUIT IN PLACE AT EXISTING PANEL "DPA" AND AT EXISTING POWER COMPANY TRANSFORMER SERVICE POLE. COORDINATE POWER OUTAGES FOR TRANSFER TO NEW SERVICE WITH OWNER'S REPRESENTATIVES AND THE POWER COMPANY.
2. CORDINATE RISER CONDUITS AND CONDUCTOR REQUIREMENTS WITH POWER COMPANY PRIOR TO ROUGH-IN. VERIFY LOCATION OF TRANSFORMER SERVICE POLE WITH POWER COMPANY.
3. REMOVE EXISTING GENERATOR. MODIFY AND EXTEND PAD TO RECEIVE NEW GENERATOR "A", FEEDER, CONTROL CONDUITS, AND BLOCK HEATER & BATTERY CHARGER BRANCH CIRCUITS. REFER TO SHEET E-304 FOR TYPICAL GENERATOR PAD FOUNDATION REQUIREMENTS.
4. REMOVE EXISTING AUTOMATIC TRANSFER SWITCH "ATS-DPA". REMOVE EXISTING FEEDER AND CONTROL CONDUCTORS FROM "ATS-DPA" TO EXISTING GENERATOR. CUT, CAP BELOW GRADE, AND ABANDON CONDUIT IN PLACE AT "ATS-DPA" AND AT EXISTING GENERATOR.
5. EXISTING MAIN PANEL "DPA" TO REMAIN.
6. REFER TO GROUNDING ELECTRODE SYSTEM DETAIL THIS SHEET.
7. PROVIDE CONCRETE PAD.
8. CONNECT "TVSS" WITH A MINIMUM OF 4#10, 1#10G - 3/4"C. REFER TO MANUFACTURER'S RECOMMENDATIONS.

ATWELL & GENT
ELECTRICAL & CONSULTING ENGINEERS
A&G PROJECT #324F6012

W. L. BURLE
ENGINEERS, P.A.
111 South Walnut Street
Greenville, MS 38701

JOSEPH W. BOWMAN
LICENSED PROFESSIONAL ENGINEER
25322
STATE OF MISSISSIPPI
04/29/2024

GS#323-024 ARPA INFR. - WASTE CENT. TREATMENT
SOUTH MISSISSIPPI CORRECTIONAL INSTITUTE
LEAKESVILLE, MISSISSIPPI

Burle Proj. No.: 08194-1-0122
File Name: E-203 POWER RISER DIAGRAM.DWG
Date: 04/29/2024
Scale: AS SHOWN
Drawn by: JWB
Checked: JWB
Revisions:
Revisions:
Revisions:

POWER RISER DIAGRAM - MAIN PLANT

E-203

Drawing Number

LIGHTING FIXTURE SCHEDULE

MARK	DESCRIPTION	BASIS OF DESIGN PRODUCT(S)		VOLTAGE	LAMP DATA			MOUNTING LOCATION	MOUNTING TYPE	MOUNTING HEIGHT	REMARKS
		MANUFACTURER	CATALOG NUMBER		QTY PER LUMINAIRE	WATTAGE	TYPE				
LVT	LED, VAPORTIGHT STRIP, SURFACE MOUNTED, 4' L, 4900 LUMENS, 4000K. WET LOCATION LISTED. POLYCARBONATE HOUSING & LENS.	LITHONIA	CSVT-L48-5000LM-MVOLT-40K-80CRI-WLFEND2	120/277	1	42	LED	CEILING	SURFACE	AT CEILING	
LW	LED, WALL PACK, DIE CAST ALUMINUM HOUSING, TEMPERED GLASS LENS, MSU DARK BRONZE FINISH, INTEGRAL PHOTOCELL, WET LOCATION LISTED.	LITHONIA	TWX2-LED-P4-40K-MVOLT-PE-DDBTXD	120/277	1	54	LED	EXTERIOR WALL	SURFACE	10'-0" AFG	
⊗	LED, EXIT SIGN, THERMOPLASTIC HOUSING, UNIVERSAL MOUNT, RED LETTERS, DOUBLE FACED, SELF DIAGNOSTICS.	LITHONIA	LQM-S-W-R-120/277-M6	120/277	FURNISH WITH FIXTURE		LED	CEILING/ WALL	SURFACE	6'8" TO BOTTOM OR JUST ABOVE DOOR	PROVIDE DIRECTIONAL ARROWS & MOUNT AS REQUIRED
PL EX	LED, FLOOD TYPE POLE LIGHT, 14K LUMENS, INTEGRAL PHOTOCELL, WET LOCATION LISTED, GALVANIZED BULLHORN BRACKET AS REQUIRED, ON EXISTING POLE.	LITHONIA	FIXTURE: RSXF1-LED-P3-40K-WFL-MVOLT-IS BRACKET: BS28-T35-TD20-GALV	120/277	1	109	LED	EXISTING POLE	BRACKET	30'-0" AFG	PROVIDE NEW BULLHORN BRACKET AS REQUIRED. LITHONIA #BS28-T35-TD20-GALV.
PLP PLP	LED, FLOOD TYPE POLE LIGHT (TWO PER POLE), 14K LUMENS, INTEGRAL PHOTOCELL, WET LOCATION LISTED, GALVANIZED BULLHORN BRACKET, ROUND STRAIGHT STEEL GALVANIZED POLE.	LITHONIA	FIXTURE: RSXF1-LED-P3-40K-WFL -MVOLT-IS-PER7 POLE: HOLOPHANE-FRSS-30-50B-F06-HG BRACKET: BS28-T35-TD20-GALV	120/277	1	109	LED	POLE	BRACKET	32'-6" AFG	REFER TO FOUNDATION DETAIL ON SHEET E-305.

MECHANICAL EQUIPMENT SCHEDULE

MARK	PHASE	WIRE	VOLTAGE	DISCONNECT	BRANCH CIRCUIT WIRING	SOURCE	NOTES
HEADWORKS							
FINE SCREEN (SCREEN DRIVE, COMPACTOR DRIVE, BRUSH DRIVE)							
FSD-1	3	3	480	WITH CONTROL PANEL "CP-FS"	3#12, 1#12G - 3/4"C.	CP-FS	1,2
FSD-2	3	3	480	WITH CONTROL PANEL "CP-FS"	3#12, 1#12G - 3/4"C.	CP-FS	1,2
FCD-1	3	3	480	WITH CONTROL PANEL "CP-FS"	3#12, 1#12G - 3/4"C.	CP-FS	1,2
FCD-2	3	3	480	WITH CONTROL PANEL "CP-FS"	3#12, 1#12G - 3/4"C.	CP-FS	1,2
FBD-1	3	3	480	WITH CONTROL PANEL "CP-FS"	3#12, 1#12G - 3/4"C.	CP-FS	1,2
FBD-2	3	3	480	WITH CONTROL PANEL "CP-FS"	3#12, 1#12G - 3/4"C.	CP-FS	1,2
COARSE SCREEN (SCREEN DRIVE, COMPACTOR DRIVE)							
CSD-1	3	3	480	WITH CONTROL PANEL "CP-CS"	3#12, 1#12G - 3/4"C.	CP-CS	1, 2
CSD-2	3	3	480	WITH CONTROL PANEL "CP-CS"	3#12, 1#12G - 3/4"C.	CP-CS	1, 2
CCD-1	3	3	480	WITH CONTROL PANEL "CP-CS"	3#12, 1#12G - 3/4"C.	CP-CS	1, 2
CCD-2	3	3	480	WITH CONTROL PANEL "CP-CS"	3#12, 1#12G - 3/4"C.	CP-CS	1, 2
SODA ASH METERING PUMP							
SA-1	1	2	120	RECEPTACLE "IN-USE" WP	2#12, 1#12G - 3/4"C.	RP-DPB	1, 2
FILTERS (DRIVES, BACKWASH PUMPS, AUTOMATIC VALVES, SUMP PUMP)							
FD-1	3	3	480	INTEGRAL WITH CONTROL PANEL	3#10, 1#10G - 3/4"C	CP-F1	1, 2
FD-2	3	3	480	INTEGRAL WITH CONTROL PANEL	3#10, 1#10G - 3/4"C	CP-F2	1, 2
FBP-1	3	3	480	INTEGRAL WITH CONTROL PANEL	3#10, 1#10G - 3/4"C	CP-F1	1, 2
FBP-2	3	3	480	INTEGRAL WITH CONTROL PANEL	3#10, 1#10G - 3/4"C	CP-F2	1, 2
AV-1A	1	2	120	INTEGRAL WITH CONTROL PANEL	2#12, 1#12G - 3/4"C.	CP-F1	1, 2
AV-1B	1	2	120	INTEGRAL WITH CONTROL PANEL	2#12, 1#12G - 3/4"C.	CP-F1	1, 2
AV-2A	1	2	120	INTEGRAL WITH CONTROL PANEL	2#12, 1#12G - 3/4"C.	CP-F2	1, 2
AV-2B	1	2	120	INTEGRAL WITH CONTROL PANEL	2#12, 1#12G - 3/4"C.	CP-F2	1, 2
SP-1	1	2	120	RECEPTACLE "IN-USE" WP	2#10, 1#10G - 3/4"C.	RP-MPA	1, 2
BIOLAC SYSTEM							
B-1	3	3	480	NFDS, 200A, 3-POLE, NEMA 4X SS	3#2, 1#6G - 1 1/2"C.	CP-BS	1, 2
B-1	3	3	480	NFDS, 200A, 3-POLE, NEMA 4X SS	3#2, 1#6G - 1 1/2"C.	CP-BS	1, 2
B-3	3	3	480	NFDS, 200A, 3-POLE, NEMA 4X SS	3#2, 1#6G - 1 1/2"C.	CP-BS	1, 2
AIR CONDITION UNITS							
AC-S1	1	2	208	NFDS, 30A, 2-POLE, NEMA 4X SS	2#10, 1#10G - 1"C.	RP-DPB	1, 2
AC-F1 THRU F4	1	2	208	NFDS, 30A, 2-POLE, NEMA 4X SS	2#8, 1#10G - 1"C.	RP-MPA	1, 2
AC-UV1 THRU UV4	1	2	208	NFDS, 30A, 2-POLE, NEMA 4X SS	2#8, 1#10G - 1"C.	RP-MPA	1, 2
BRIDGE CRANE							
BC-1	1	2	120	NFDS, 30A, 2-POLE, NEMA 4X SS	2#10, 1#10G - 3/4"C.	RP-MPA	1, 2
BC-2	1	2	120	NFDS, 30A, 2-POLE, NEMA 4X SS	2#10, 1#10G - 3/4"C.	RP-MPA	1, 2
UV DISINFECTION SYSTEM							
LCP-1			24VDC	N/A	AS REQUIRED BY UV SYSTEM SUPPLIER	PDC-1A, 1B	1, 2
LLS-1			24VDC	N/A	AS REQUIRED BY UV SYSTEM SUPPLIER	LCP	1, 2
FLOW METER							
FM-1	1	2	120	N/A	2#10, 1#10G - 3/4"C.	RP-MPA	1, 2, 3
FM-1			4-20mA		INSTRUMENT CABLE	RTU-3 & UV SCC	1, 2, 3
FM-2	1	2	120	N/A	2#10, 1#10G - 3/4"C.	RP-DPB	1, 2, 3
FM-2			4-20mA		INSTRUMENT CABLE	RTU-5 & SA-1	1, 2, 3

EQUIPMENT SCHEDULE NOTES:

1. VERIFY LOCATION AND REQUIREMENTS WITH C SHEETS.
2. COORDINATE REQUIREMENTS WITH SYSTEM SUPPLIER(S).
3. VERIFY POWER SUPPLY FOR FLOW METER. VERIFY ROUTING OF 4-20mA ANALOG INPUT WITH EQUIPMENT AND SCADA SYSTEM SUPPLIERS.

CONTROL PANEL POWER SCHEDULE

MARK	PHASE	WIRE	VOLTAGE	DISCONNECT	TAG NO.	BRANCH CIRCUIT WIRING	FED FROM	NOTES
FINE SCREEN								
CP-FS	3	3	480	INTEGRAL WITH CONTROL PANEL	25	AS SHOWN ON E-203	DPB	
COARSE SCREEN								
CP-CS	3	3	480	INTEGRAL WITH CONTROL PANEL	26	AS SHOWN ON E-203	DPB	
INFLUENT PUMP STATION								
CP-IPS	3	3	480	INTEGRAL WITH CONTROL PANEL	27	AS SHOWN ON E-203	DPB	
AERATORS								
CP-AER	3	3	480	INTEGRAL WITH CONTROL PANEL	17	AS SHOWN ON E-203	MPA	
CLARIFIERS (SCUM PUMP, RAKES) FED FROM CONTROL PANEL "BS" FOR BIOLAC SYSTEM								
CP-SP	3	3	480	INTEGRAL WITH CONTROL PANEL		3#10, 1#10G - 3/4"C	CP-BS	
CP-CR1	3	3	480	INTEGRAL WITH CONTROL PANEL		3#10, 1#10G - 3/4"C	CP-BS	
CP-CR2	3	3	480	INTEGRAL WITH CONTROL PANEL		3#10, 1#10G - 3/4"C	CP-BS	
FILTERS (DRIVES, BACKWASH PUMPS, AUTOMATIC VALVES)								
CP-F1	3	3	480	INTEGRAL WITH CONTROL PANEL	14	AS SHOWN ON E-203	MPA	
CP-F2	3	3	480	INTEGRAL WITH CONTROL PANEL	15	AS SHOWN ON E-203	MPA	
BIOLAC SYSTEM								
CP-BS	3	3	480	INTEGRAL WITH CONTROL PANEL	13	AS SHOWN ON E-203	MPA	
UV DISINFECTION SYSTEM (SYSTEM CONTROL CENTER, POWER DISTRIBUTION CENTER, HYDRAULIC SYSTEM CENTER)								
SCC-1	1	2	120	INTEGRAL WITH CONTROL PANEL		2#10, 1#10G - 3/4"C.	RP-MPA	
PDC-1A	3	3	277/480	INTEGRAL WITH CONTROL PANEL	18	AS SHOWN ON E-203	MPA	
PDC-1B	3	3	277/480	INTEGRAL WITH CONTROL PANEL	19	AS SHOWN ON E-203	MPA	
PDC-1C	3	3	277/480	INTEGRAL WITH CONTROL PANEL	20	AS SHOWN ON E-203	MPA	
HSC-1	3	3	480	INTEGRAL WITH CONTROL PANEL	21	AS SHOWN ON E-203	MPA	
SCADA SYSTEM (CENTRAL TERMINAL UNIT & REMOTE TERMINAL UNITS)								
CTU	1	2	120	INTEGRAL WITH CONTROL PANEL		2#10, 1#10G - 3/4"C.	CONTROL BLDG REC.	
RTU-1	1	2	120	INTEGRAL WITH CONTROL PANEL		2#10, 1#10G - 3/4"C.	RP-MPA	NEMA 4X SS
RTU-2	1	2	120	INTEGRAL WITH CONTROL PANEL		2#10, 1#10G - 3/4"C.	RP-MPA	NEMA 4X SS
RTU-3	1	2	120	INTEGRAL WITH CONTROL PANEL		2#10, 1#10G - 3/4"C.	RP-MPA	NEMA 4X SS
RTU-4	1	2	120	INTEGRAL WITH CONTROL PANEL		2#10, 1#10G - 3/4"C.	RP-MPA	NEMA 4X SS
RTU-5	1	2	120	INTEGRAL WITH CONTROL PANEL		2#10, 1#10G - 3/4"C.	RP-DPB	NEMA 4X SS

ATWELL & GENT
ELECTRICAL & CONSULTING ENGINEERS
A&G PROJECT #324F6012

W. L. BURLE
ENGINEERS, P.A.
111 South Walnut Street
Greenville, MS 38701

JOSEPH W. BOWMAN
LICENSED PROFESSIONAL ENGINEER
25322
STATE OF MISSISSIPPI
04/29/2024

GS#323-024 ARPA INFR. - WASTE CENT. TREATMENT
SOUTH MISSISSIPPI CORRECTIONAL INSTITUTE
LEAKESVILLE, MISSISSIPPI

Burle Proj. No.: 08194-1-0122
File Name: E-205 ELECTRICAL SCHEDULES.DWG
Date: 04/29/2024
Scale: AS SHOWN
Drawn by: JWB
Checked: JWB
Revisions:
Revisions:
Revisions:

ELECTRICAL SCHEDULES

E-205

Drawing Number

PANELBOARD SCHEDULE — PANEL "MPA"

277/480 VOLTS, 3 PHASE, 4 WIRE, 1200 AMP MAIN BREAKER - LSIG — I-LINE STYLE PANEL
ISOLATED NEUTRAL BUS, GROUND BUS, CONCRETE BASE WITH — 99" OF MOUNTING SPACE
EQUIPMENT STAND MOUNT, HINGED FRONT TRIM, NEMA 3R ENCLOSURE — MIN. 65K A (SYM) AVAILABLE FAULT

CKT NO.	CIRCUIT DESCRIPTION	BRKR A/POLE	CKT VA	VOLT-AMPERES/ PHASE PH A	PH B	PH C	CKT VA	BRKR A/POLE	CIRCUIT DESCRIPTION	CKT NO.
1	EXT. SITE LIGHTS	20/1	2000	88320			86320	600/3 (LSIG)	EXISTING PANEL "DPA"	2
3	FILTER BLDG LTS	20/1	2000		88320		86320			
5	UV BLDG LTS	20/1	2000			88320	86320			
7	TRANSFORMER "T-MPA"	150/3	25000	98538			73538	600/3 (LSIG)	CONTROL PANEL "CP-BS"	4
			25000		98538		73538			
			25000			98538	73538			
9	CONTROL PANEL "CP-F1"	20/3	4150	8300			4150	20/3	CONTROL PANEL "CP-F2"	6
			4150		8300		4150			
			4150			8300	4150			
11	CONTROL PANEL "CP-EPS"	250/3 (LSIG)	17430	23793			6363	40/3	CONTROL PANEL "CP-AER"	8
			17430		23793		6363			
			17430			23793	6363			
13	UV SYSTEM "PDC-1A"	20/3	2213	4426			2213	20/3	UV SYSTEM "PDC-1B"	10
			2213		4426		2213			
			2213			4426	2213			
15	UV SYSTEM "PDC-1C"	20/3	2213	3046			833	15/3	UV SYSTEM "HSC"	12
			2213		3046		833			
			2213			3046	833			
17	PANEL "DPB"	200/3	53708	53708			00	30/3	SPARE	14
			53708		58140		4432			
			53708			53708	0			
23	SPARE	30/3	0	0			0	30/3	SPARE	20
			0		0		0			
			0			0	0			
25	TVSS	30/3	0	0			0	30/3	SPARE	22
			0		0		0			
			0			0	0			
				280131	284563	280131	VA			
	FACTORS:				844825	VA	CONN			
	EXPANSION	1.15			971549			480	V (L-L)	
	DEMAND	.8			777239	VA	DEM	935	A (DEM)	
	CODE	1.25			971549	VA	CODE	1169	A (CODE)	

PANELBOARD SCHEDULE NOTES:

1. "LSIG" DENOTES ELECTRONIC TRIP CIRCUIT BREAKER WITH LONG TIME, SHORT TIME, INSTANTANEOUS, & GROUND FAULT.

PANELBOARD SCHEDULE — PANEL "RP-MPA"

120/208 VOLTS, 3 PHASE, 4 WIRE, 250 AMP MAIN BREAKER — NQO STYLE PANEL
ISOLATED NEUTRAL BUS, GROUND BUS, SURFACE MOUNT ON — 42 CKT PANEL
EQUIPMENT STAND, HINGED FRONT TRIM, NEMA 3R ENCLOSURE — MIN. 22K A (SYM) AVAILABLE FAULT

CKT NO.	CIRCUIT DESCRIPTION	BRKR A/POLE	CKT VA	VOLT-AMPERES/ PHASE PH A	PH B	PH C	CKT VA	BRKR A/POLE	CIRCUIT DESCRIPTION	CKT NO.
1	REC - FILTER BLDG	20/1	1000	2000			1000	20/1	REC - FILTER BLDG	2
3	REC - FILTER BLDG	20/1	1000		2000		1000	20/1	REC - FILTER BLDG	4
5	RTU-1	20/1	800			1600	800	20/1	RTU-2	6
7	RTU-3	20/1	800	1600			800	20/1	RTU-4	8
9	REC - UV BLDG	20/1	1000		2000		1000	20/1	REC - UV BLDG	10
11	REC - UV BLDG	20/1	1000			2000	1000	20/1	SUMP PUMP "SP-1"	12
13	UV-SCC	20/1	1440	2440			1000	20/1	BRIDGE CRANE "BC1"	14
15	FM-1 (AS REQUIRED)	20/1	400		1400		1000	20/1	BRIDGE CRANE "BC2"	16
17	AC-F1	30/2	2600			5200	2600	30/2	AC-UV1	18
19			2600	5200			2600			20
21	AC-F2	30/2	2600		5200		2600	30/2	AC-UV2	22
23			2600			5200	2600			24
25	AC-F3	30/2	2600	5200			2600	30/2	AC-UV3	26
27			2600		5200		2600			28
29	AC-F4	30/2	2600			5200	2600	30/2	AC-UV4	30
31			2600	5200			2600			32
33	SPARE	20/1	0		0		0	20/1	SPARE	34
35	SPARE	20/1	0			0	0	20/1	SPARE	36
37	SPARE	20/1	0	0			0	30/3	TVSS	38
39	SPARE	20/1	0		0		0			40
41	SPARE	20/1	0			0	0			42
				21640	15800	19200	VA			
	FACTORS:				56640	VA	CONN			
	EXPANSION	1.5			84960			208	V (L-L)	
	DEMAND	0.8			67968	VA	DEM	189	A (DEM)	
	CODE	1.25			84960	VA	CODE	236	A (CODE)	

PANELBOARD SCHEDULE — PANEL "RP-DPB"

120/208 VOLTS, 3 PHASE, 4 WIRE, 60 AMP MAIN BREAKER — NQO STYLE PANEL
ISOLATED NEUTRAL BUS, GROUND BUS — 30 CKT PANEL
SURFACE MOUNT, HINGED FRONT TRIM, NEMA 3R ENCLOSURE — MIN. 22K A (SYM) AVAILABLE FAULT

CKT NO.	CIRCUIT DESCRIPTION	BRKR A/POLE	CKT VA	VOLT-AMPERES/ PHASE PH A	PH B	PH C	CKT VA	BRKR A/POLE	CIRCUIT DESCRIPTION	CKT NO.
1	REC - BUILDING	20/1	600	1200			600	20/1	REC - BUILDING	2
3	REC - SODA ASHE	20/1	1000		1800		800	20/1	RTU-5	4
5	AC-S1	30/2	2600			2600	0	20/1	SPARE	6
7			2600	2600			0	20/1	SPARE	8
9	SPARE	20/1	0		0		0	20/1	SPARE	10
11	SPARE	20/1	0			0	0	20/1	SPARE	12
13	SPARE	20/1	0	0			0	20/1	SPARE	14
15	SPARE	20/1	0		0		0	20/1	SPARE	16
17	SPACE	20/1	0			0	0	20/1	SPACE	18
19	SPACE	20/1	0	0			0	20/1	SPACE	20
21	SPACE	20/1	0		0		0	20/1	SPACE	22
23	SPACE	20/1	0			0	0	20/1	SPACE	24
25	SPACE	20/1	0	0			0	30/3	TVSS	26
27	SPACE	20/1	0		0		0			28
29	SPACE	20/1	0			0	0			30
				3800	1800	2600	VA			
	FACTORS:				8200	VA	CONN			
	EXPANSION	2			16400			208	V (L-L)	
	DEMAND	.8			13120	VA	DEM	36	A (DEM)	
	CODE	1.25			16400	VA	CODE	46	A (CODE)	

PANELBOARD SCHEDULE — PANEL "DPB"

277/480 VOLTS, 3 PHASE, 4 WIRE, 200 AMP MAIN BREAKER (400 AMP RATED) — NF STYLE PANEL
ISOLATED NEUTRAL BUS, GROUND BUS, LSIG MAIN BREAKER — 42 CKT PANEL
SURFACE MOUNT, HINGED FRONT TRIM, NEMA 3R ENCLOSURE — MIN. 42K A (SYM) AVAILABLE FAULT

CKT NO.	CIRCUIT DESCRIPTION	BRKR A/POLE	CKT VA	VOLT-AMPERES/ PHASE PH A	PH B	PH C	CKT VA	BRKR A/POLE	CIRCUIT DESCRIPTION	CKT NO.
1	EXT. SITE LIGHTS	20/1	1000	6000			5000	30/3	TRANSFORMER "T-DPB"	2
3	INTERIOR LIGHTS	20/1	800		5800		5000			4
5	SPARE	20/1	0			5000	5000			6
7	CP-IPS (INFLUENT PUMP STATION)	75/3	17430	26816			9386	60/3	CP-FS (FINE SCREEN)	8
9			17430		26816		9386			10
11			17430			26816	9386			12
13	CP-CS (COARSE SCREEN)	30/3	4683	4683			0	40/3	SPARE	14
15			4683		4683		0			16
17			4683			4683	0			18
19	SPARE	30/3	0	0			0	30/3	SPARE	20
21			0		0		0			22
23			0			0	0			24
25	SPACE	30/3	0	0			0	30/3	SPACE	26
27			0		0		0			28
29			0			0	0			30
31	SPACE	30/3	0	0			0	30/3	SPACE	32
33			0		0		0			34
35			0			0	0			36
37	SPACE	30/3	0	0			0	30/3	TVSS	38
39			0		0		0			40
41			0			0	0			42
				37499	37299	36499	VA			
	FACTORS:				111297	VA	CONN			
	EXPANSION	1.25			139121			480	V (L-L)	
	DEMAND	.8			111297	VA	DEM	134	A (DEM)	
	CODE	1.25			139121	VA	CODE	167	A (CODE)	

W. L. BURLE
ENGINEERS, P.A.
111 South Walnut Street
Greenville, MS 38701

JOSEPH W. BOWMAN
LICENSED PROFESSIONAL ENGINEER
25322
STATE OF MISSISSIPPI
04/29/2024

GS#323-024 ARPA INFR. - WASTE CENT. TREATMENT
SOUTH MISSISSIPPI CORRECTIONAL INSTITUTE
LEAKESVILLE, MISSISSIPPI

Burle Proj. No.: 08194-1-0122
File Name: E-206 ELECTRICAL SCHEDULES.DWG
Date: 04/29/2024
Scale: AS SHOWN
Drawn by: JWB
Checked: JWB
Revisions:
Revisions:
Revisions:

ATWELL & GENT
ELECTRICAL & CONSULTING ENGINEERS
A&G PROJECT #324F6012

ELECTRICAL SCHEDULES

E-206

Drawing Number

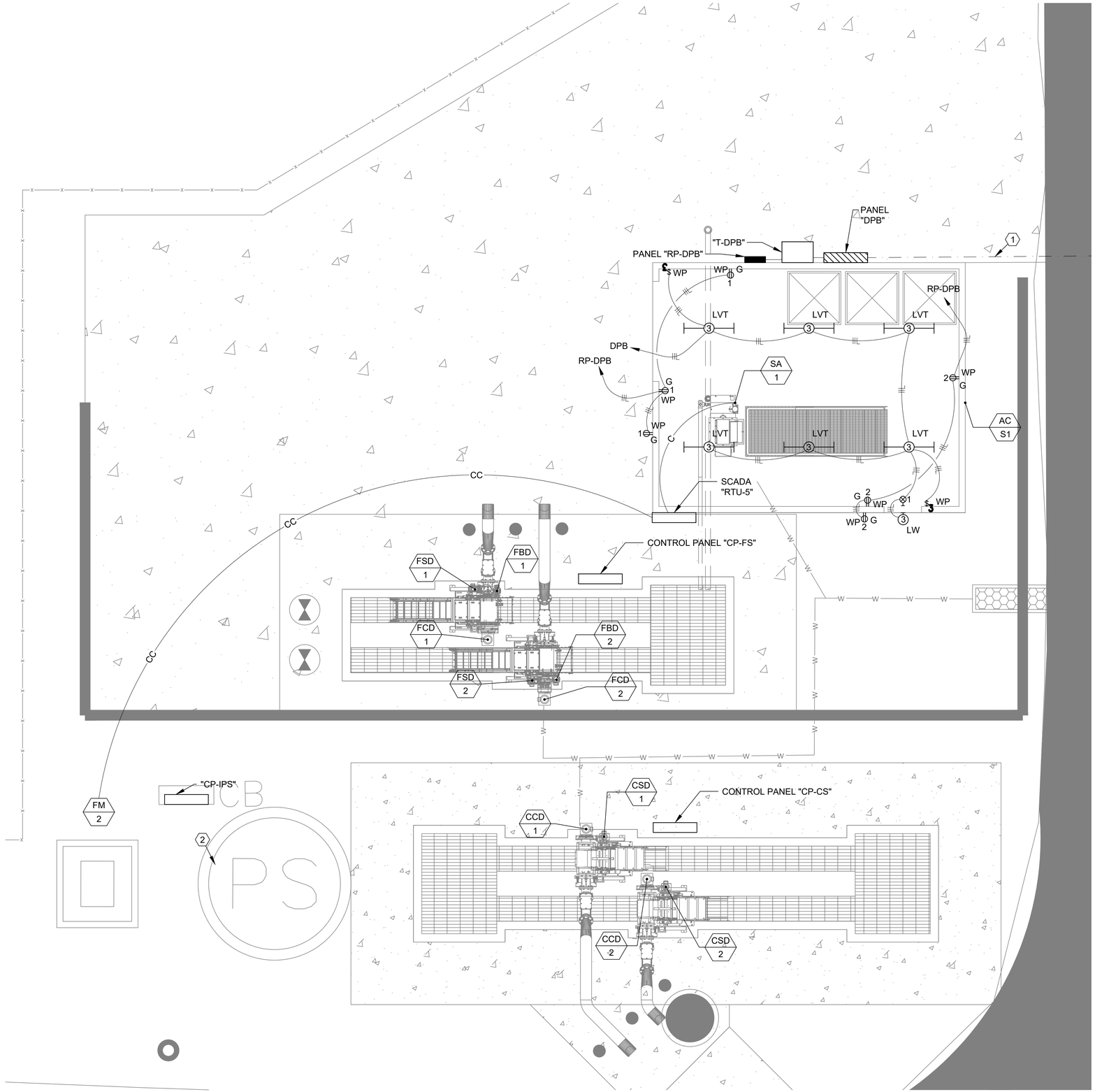

ENLARGED PLAN - HEADWORKS

SCALE: 1/4"=1'-0"

GENERAL NOTES

1. REFER TO SHEET E-201 FOR ELECTRICAL SITE PLAN.
2. REFER TO SHEET E-202 FOR SCADA SYSTEM PLAN.
3. REFER TO SHEET E-205 FOR MECHANICAL EQUIPMENT SCHEDULE AND CONTROL PANEL SCHEDULE FOR CONDUIT AND WIRE REQUIREMENTS.
4. REFER TO SHEET E-206 FOR PANELBOARD SCHEDULES.
5. REFER TO SHEET E-203 FOR POWER RISER DIAGRAM.
6. REFER TO SPECIFICATIONS FOR CONDUIT AND CONDUCTOR GENERAL REQUIREMENTS.

NUMBERED NOTES

(1) UNDERGROUND FEEDER CONDUITS. REFER TO E-201 OVERALL ELECTRICAL SITE PLAN FOR CONTINUATION. REFER TO E-203 FOR CONDUIT AND WIRE SCHEDULE.

(2) INFLUENT PUMP STATION. REFER TO SHEET E-310 FOR ELECTRICAL DETAILS. REFER TO E-205 FOR MECHANICAL EQUIPMENT SCHEDULE.

W. L. BURLE
ENGINEERS, P.A.
111 South Walnut Street
Greenville, MS 38701

JOSEPH W. BOWMAN
LICENSED PROFESSIONAL ENGINEER
25322
STATE OF MISSISSIPPI
04/29/2024

GS#323-024 ARPA INFR. - WASTE CENT. TREATMENT
SOUTH MISSISSIPPI CORRECTIONAL INSTITUTE
LEAKESVILLE, MISSISSIPPI

Burle Proj. No.:	08194-1-0122
File Name:	E-301 ENLARGED PLAN - HEADWORKS.DWG
Date:	04/29/2024
Scale:	AS SHOWN
Drawn by:	JWB
Checked:	JWB
Revisions:	
Revisions:	
Revisions:	

ATWELL & GENT
ELECTRICAL & CONSULTING ENGINEERS
A&G PROJECT #324F6012

ENLARGED PLAN - HEADWORKS

E-301

Drawing Number

GENERAL PULLBOX NOTES

1. GRAVEL, 12" DEEP, IS REQUIRED UNDER PULLBOXES FOR DRAINAGE.
2. CONCRETE COLLAR, 6"W x 6"D, IS REQUIRED FOR PULLBOXES PLACED IN SOIL.
3. "ELECTRIC" LOGO FOR POWER REQUIRED ON COVER. "COMMUNICATIONS" LOGO FOR CONTROLS/COMMUNICATIONS REQUIRED ON COVER.
4. COVERS SHALL BOLT DOWN.
5. PULL BOX SHALL BE SIZED TO ACCOMMODATE ALL CONDUITS ENTERING AND EXITING. PROVIDE SPACE FOR RADIUS BEND PULLING REQUIREMENTS OF CONDUCTORS AND CABLES. INCLUDE LAYOUT OF EACH PULL BOX IN SUBMITTAL. MINIMUM SIZE SHALL BE 24"L X 24"W X 24"D.

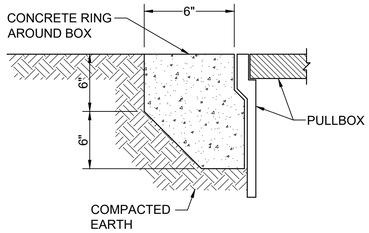

NOTES:

1. CONCRETE ENCASEMENT TO BE 3,500 PSI MINIMUM. COMPACT TO AT LEAST 90% OF MAXIMUM DRY DENSITY
2. IN ACCORDANCE WITH ASTM D698.

DETAIL "A"

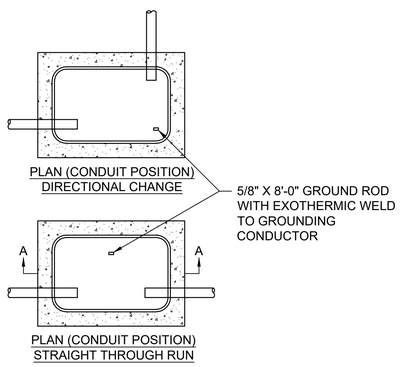

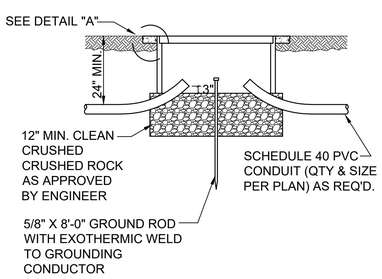

SECTION A - A

PULLBOX DETAIL

SCALE: NONE

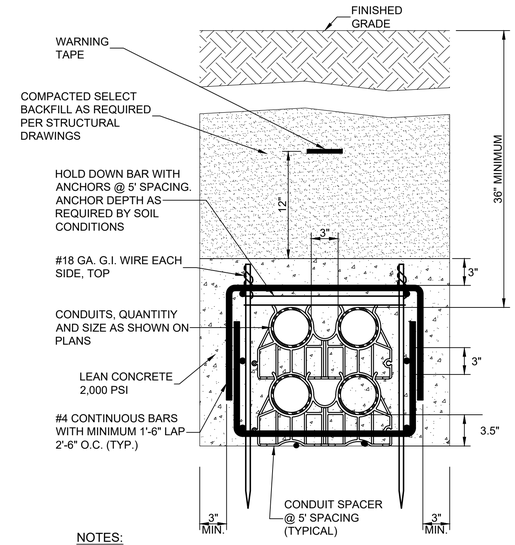

NOTES:

1. REFER TO SPECIFICATION SECTIONS 03 11 00 - CONCRETE FORMING, 03 20 00 - CONCRETE REINFORCEMENT, & 03 30 00 - CAST IN PLACE CONCRETE.

CONCRETE ENCASED DUCTBANK DETAIL (TYPICAL)

SCALE: NONE

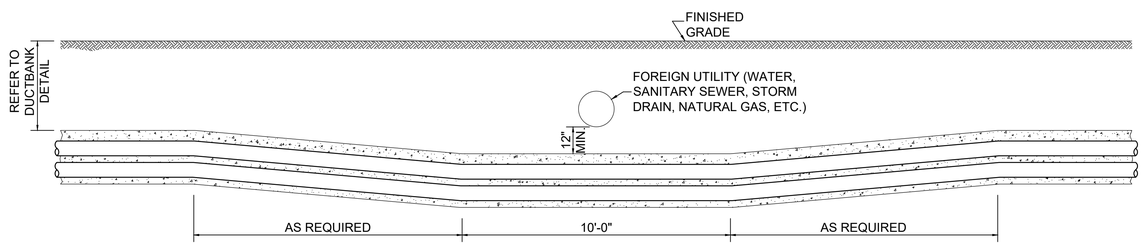

DUCTBANK CROSSING OTHER UTILITIES DETAIL (TYPICAL)

SCALE: NONE

DETAIL NOTES:

1. WHERE OTHER UTILITIES (WATER, SANITARY SEWER, SLOT DRAIN, STORM DRAIN, NATURAL GAS, ETC.) MUST BE CROSSED BY DUCTBANK, CONTRACTOR SHALL ADJUST ELEVATION OF DUCTBANK TO MAINTAIN A MINIMUM CLEAR DISTANCE OF 12" ABOVE OR BELOW SUCH UTILITIES. IN ALL CASES, CONTRACTOR SHALL MAINTAIN MINIMUM BURIAL DEPTH SPECIFIED.
2. WHERE CHANGES IN ELEVATION ARE REQUIRED, CONTRACTOR SHALL MINIMIZE THE NUMBER OF BENDS IN DUCTBANK DUCTS TO THE GREATEST EXTENT PRACTICABLE.
3. CONTRACTOR SHALL USE FIELD FABRICATING TECHNIQUES PER CONDUIT MANUFACTURER'S WRITTEN INSTRUCTIONS. IN ALL CASES, CONTRACTOR SHALL MAINTAIN A MINIMUM BENDING RADIUS OF 35 FEET, BOTH HORIZONTALLY AND VERTICALLY.

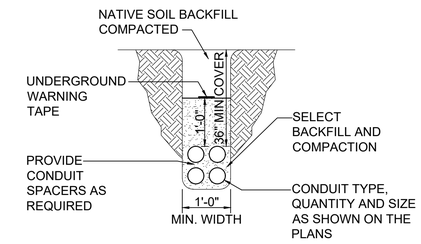

DUCT IN TRENCH (TYP.)

SCALE: NONE

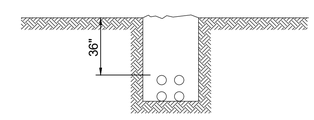

DUCTBANK DETAIL

SCALE: NONE

W. L. BURLE
ENGINEERS, P.A.
111 South Walnut Street
Greenville, MS 38701

JOSEPH W. BOWMAN
LICENSED PROFESSIONAL ENGINEER
25322
STATE OF MISSISSIPPI
04/29/2024

GS#323-024 ARPA INFR. - WASTE CENT. TREATMENT
SOUTH MISSISSIPPI CORRECTIONAL INSTITUTE
LEAKESVILLE, MISSISSIPPI

Burle Proj. No.: 08194-1-0122

File Name: E-304 ELECTRICAL DETAISL.DWG

Date: 04/29/2024

Scale: AS SHOWN

Drawn by: JWB

Checked: JWB

Revisions:

Revisions:

Revisions:

ATWELL & GENT
ELECTRICAL & CONSULTING ENGINEERS
A&G PROJECT #324F6012

ELECTRICAL DETAILS

E-304

Drawing Number

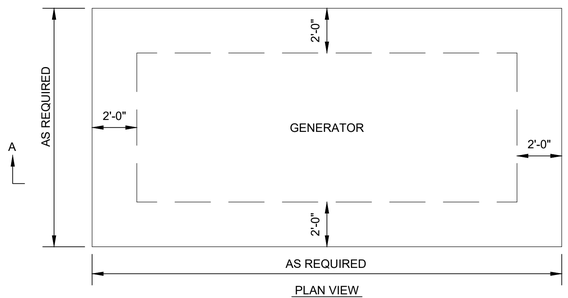

PLAN VIEW

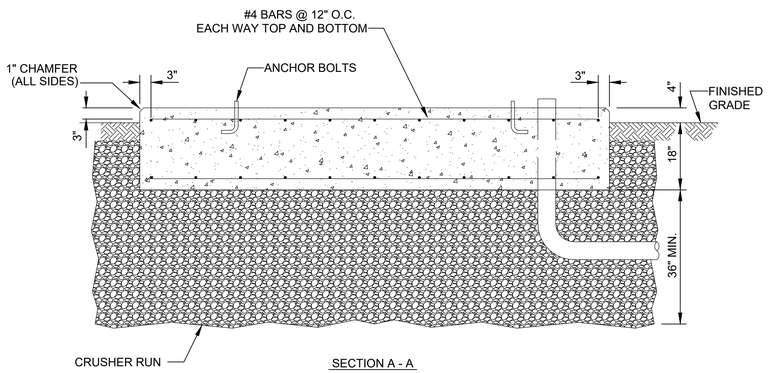

SECTION A - A

NOTES:

1. USE 3,000 PSI CONCRETE AND 60,000 PSI REINFORCING STEEL.
2. VERIFY DIMENSIONS FOR GENERATOR PAD FOUNDATION WITH ENGINEER BEFORE INSTALLATION. DIMENSIONS OF PAD FOUNDATION MAY HAVE TO BE CHANGED FOR GENERATOR FURNISHED.
3. VERIFY PLACEMENT OF CONDUITS IN GENERATOR PAD FOUNDATION WITH ENGINEER BEFORE INSTALLATION.
4. PROVIDE AND INSTALL ANCHOR BOLTS. SIZE, NUMBER AND TYPE AS REQUIRED BY MANUFACTURER.
5. THE CONTRACTOR SHALL REMOVE 36" OF EXISTING MATERIAL UNDERNEATH THE BOTTOM OF THE GENERATOR SLAB. THE MATERIAL SHALL BE REMOVED AT LEAST 12" HORIZONTALLY BEYOND THE WIDTH OF THE SLAB. THE CONTRACTOR SHALL BACKFILL WITH CRUSHER RUN (CRUSHED STONE - MS STANDARD SPECIFICATIONS FOR STATE AID ROAD AND BRIDGE CONSTRUCTION - S-304-D; SPECIFICATION - S-703.04.3 - GRADATION SIZE 3/4" AND DOWN SIZE). THE CRUSHER RUN SHALL BE COMPACTED TO 95% OF STANDARD DENSITY IN 8" LAYERS.

GENERATOR PAD FOUNDATION DETAIL

SCALE: NONE

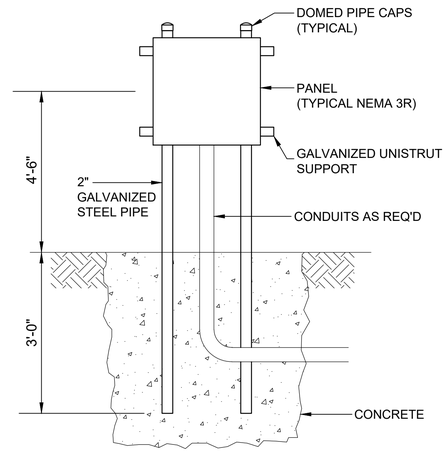

TYPICAL PANEL MOUNTING DETAIL

SCALE: NONE

NOTES:

1. BOND STEEL TO GROUND

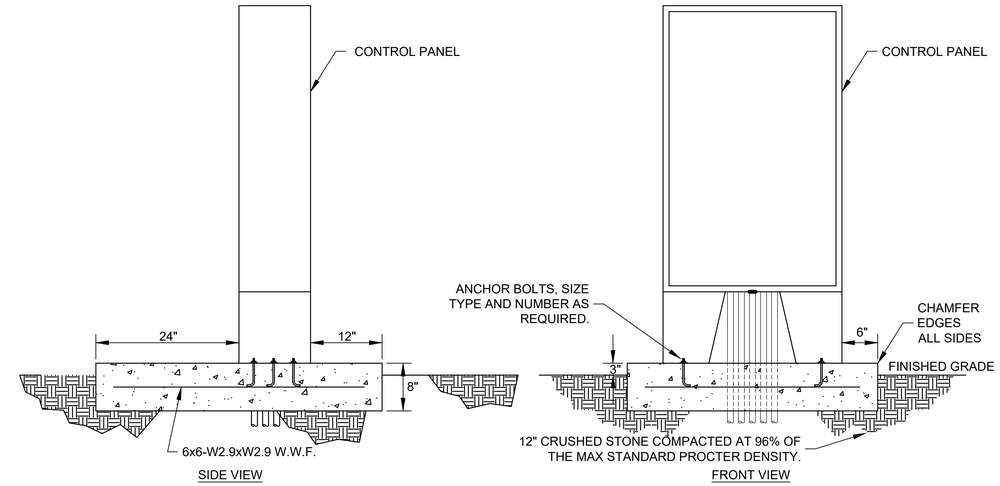

TYPICAL CONTROL PANEL DETAILS

SCALE: NONE

GENERAL NOTES FOR SITE LIGHTING INSTALLATION:

1. CURING: ALL CONCRETE SHALL BE MAINTAINED AT 50 DEGREES FAHRENHEIT MINIMUM AND IN A VISIBLY MOIST CONDITION FOR AT LEAST 7 DAYS AFTER PLACEMENT. ALL EXPOSED CONCRETE SURFACES SHALL BE KEPT MOIST AFTER POURING BY USE OF FORMS, PLASTIC VAPOR BARRIER, OR SUITABLE CURING COMPOUND. INTERMITTENT WETTING SHALL NOT BE PERMITTED. ALL CONCRETE SHALL BE CURED IN ACCORDANCE WITH ACI PUBLICATION "STANDARD PRACTICE FOR CURING CONCRETE".
2. LOADING: LIGHT POLES SHALL NOT BE PLACED ON CONCRETE PIERS AND PEDESTALS FOR AT LEAST 5 DAYS AFTER POURING AND CURING. AT NO TIME DURING CONSTRUCTION SHALL LOADS ON CONCRETE EXCEED THE LIVE AND DEAD LOADS FOR WHICH THE STRUCTURE WAS DESIGNED.
3. GROUTING:
   - ALL BASEPLATES BENEATH POLES FOR AREA LIGHTING SHALL BE FULLY GROUTED.
   - USE A FACTORY PRE-MIXED, HIGH STRENGTH, NON-SHRINK, NON-METALLIC, CEMENTITIOUS GROUT THAT MEETS OR EXCEEDS ASTM C 1107.
   - PREPARE SURFACES, MIX, AND PLACE GROUT IN ACCORDANCE WITH MANUFACTURER'S INSTRUCTIONS.
   - FILL ALL VOIDS AND ENSURE FULL CONTACT WITH ALL ADJOINING SURFACES. FULLY PACK PLASTIC GROUT. PROVIDE FORMS AND AIR HOLES AS NECESSARY FOR FLOWABLE GROUT.
   - BEFORE FINAL SET, CUT BACK AND SLOPE SIDES OF GROUT TO 45 DEGREES AS SHOWN IN DETAILS.
   - PROVIDE A BRUSHED FINISH ON EXPOSED SURFACES.
   - IMMEDIATELY AFTER COMPLETION OF FINISHING OPERATIONS, WET CURE GROUT FOR 3 DAYS MINIMUM OR IN ACCORDANCE WITH THE MANUFACTURER'S INSTRUCTIONS.
   - PROVIDE GROUT WITH A MINIMUM 28 DAY COMPRESSIVE STRENGTH OF 7000 PSI WHEN TESTED IN ACCORDANCE WITH ASTM C 1107.
   - USE BASF MASTERFLOW 928 OR EQUAL.

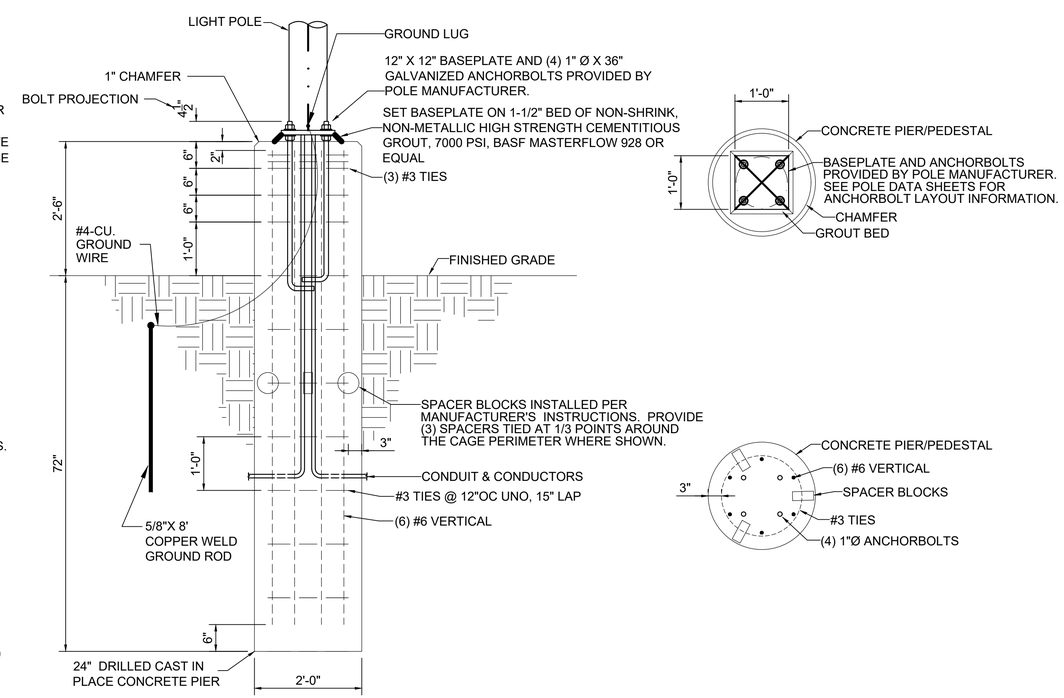

PIER FOUNDATION DETAIL - FIXTURE "PLP"

SCALE: NONE

ATWELL & GENT
ELECTRICAL & CONSULTING ENGINEERS
A&G PROJECT #324F6012

W. L. BURLE
ENGINEERS, P.A.
111 South Walnut Street
Greenville, MS 38701

JOSEPH W. BOWMAN
LICENSED PROFESSIONAL ENGINEER
25322
STATE OF MISSISSIPPI
04/29/2024

GS#323-024 ARPA INFR. - WASTE CENT. TREATMENT
SOUTH MISSISSIPPI CORRECTIONAL INSTITUTE
LEAKESVILLE, MISSISSIPPI

Burle Proj. No.:	08194-1-0122
File Name:	E-305 ELECTRICAL DETAILS.DWG
Date:	04/29/2024
Scale:	AS SHOWN
Drawn by:	JWB
Checked:	JWB
Revisions:	
Revisions:	
Revisions:	

ELECTRICAL DETAILS

E-305

Drawing Number

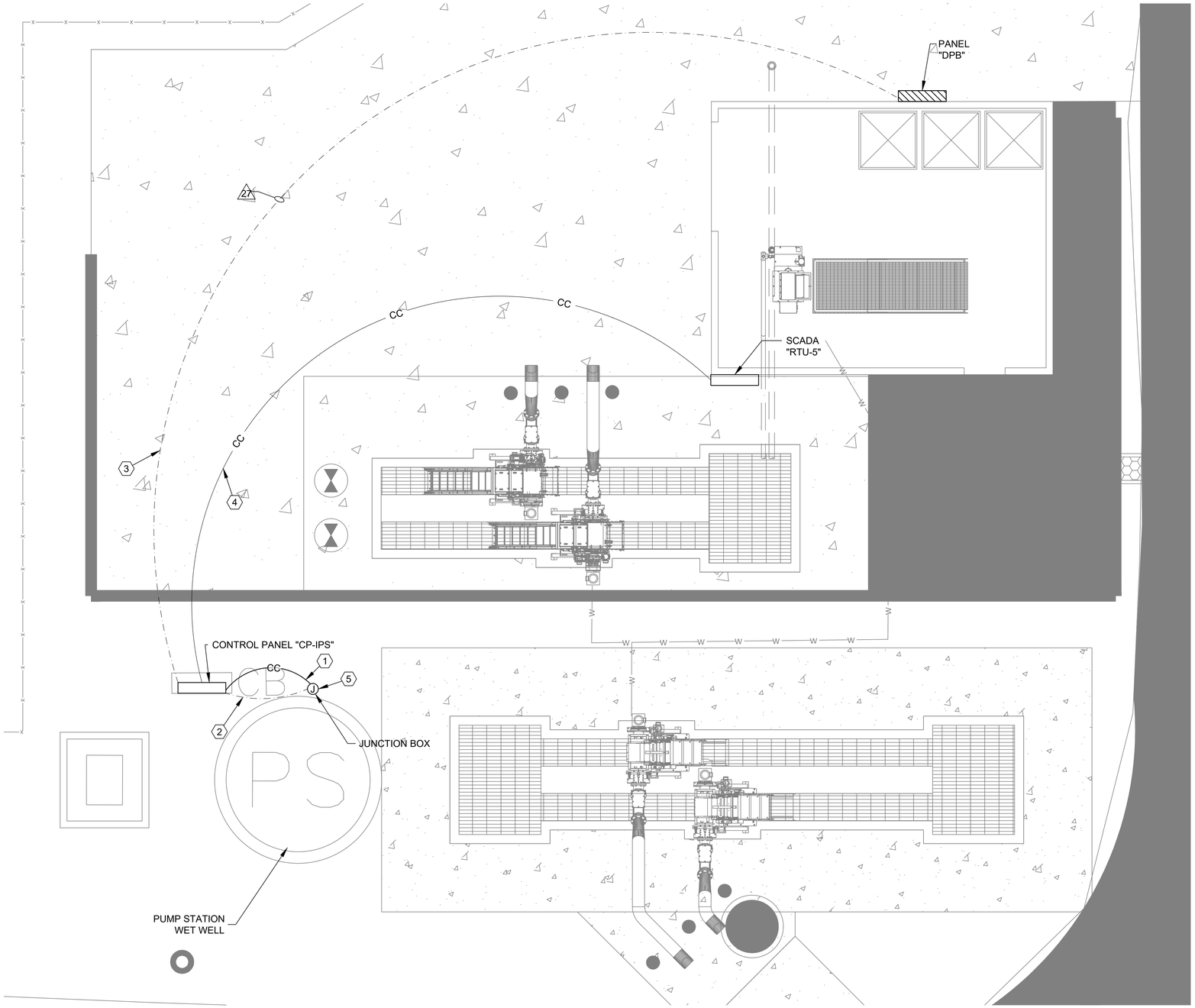

ENLARGED PLAN - INFLUENT PUMP STATION

SCALE: 1/4"=1'-0"

GENERAL NOTES

1. REFER TO SHEET E-201 FOR ELECTRICAL SITE PLAN.
2. REFER TO SHEET E-202 FOR SCADA SYSTEM PLAN.
3. REFER TO SHEET E-203 FOR POWER RISER DIAGRAM.
4. REFER TO SHEET E-205 FOR MECHANICAL EQUIPMENT SCHEDULE AND CONTROL PANEL SCHEDULE FOR CONDUIT AND WIRE REQUIREMENTS.
5. REFER TO SHEET E-206 FOR PANELBOARD SCHEDULES.
6. REFER TO SPECIFICATIONS FOR CONDUIT AND CONDUCTOR GENERAL REQUIREMENTS.

NUMBERED NOTES

1. CONTROL CIRCUIT(S) TO WET WELL. PROVIDE A MINIMUM OF TWO (2) 1" CONDUITS. PROVIDE CONTROL CONDUCTORS FOR PUMP SEAL FAILURES, FLOAT(S), TRANSDUCER, ETC. AS REQUIRED. VERIFY QUANTITY AND TYPE OF CONTROL CONDUCTORS WITH CONTROL SYSTEM SUPPLIER BEFORE INSTALLATION.
2. SUBMERSIBLE PUMPS FEEDER CIRCUITS. (TYPICAL)
3. UNDERGROUND POWER FEEDER TO PANEL "DPB". REFER TO SHEET E-203 FOR POWER RISER DIAGRAM CONDUIT & WIRE SCHEDULE.
4. UNDERGROUND SCADA CABLES TO RTU-5. REFER TO SPECIFICATIONS.
5. JUNCTION BOX, NEMA 4X FIBERGLASS WITH TERMINAL BLOCKS FOR POWER & CONTROL CABLES. SIZE AS REQUIRED. SEAL ALL CONDUITS ENTERING WETWELL PER SPECIFICATIONS.
6. EXPLOSIVE GAS SEAL OFF FITTINGS (TYPICAL FOR POWER & CONTROL CONDUITS).
7. (3) #8 THWN, (1) #10 THWN (G), 1" CONDUIT PER PUMP FEEDER.

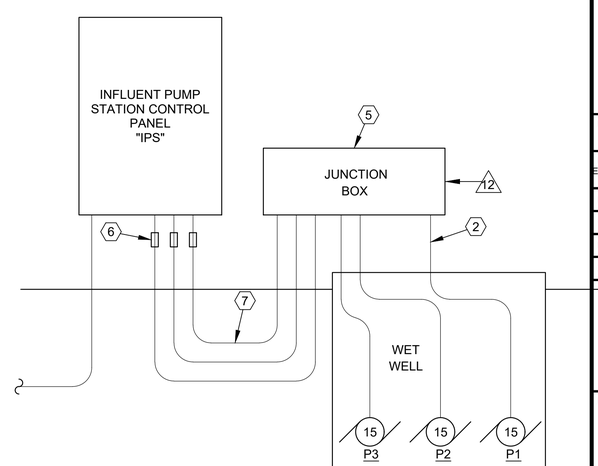

PUMP STATION POWER RISER DIAGRAM

SCALE: NONE

INFLUENT PUMP STATION EQUIPMENT SCHEDULE

MARK	ITEM DESCRIPTION	VOLTS/ PHASE	HP	AMPS	STARTER			DISCONNECT SWITCH			REMARKS
					SIZE	TYPE	LOCATION	SIZE	FUSE	LOCATION	
P-1	SEWAGE PUMP	480/3	15	21A	15HP	VFD	CONTROL PANEL	N/A	N/A	N/A	VFD SUPPLIED WITH PUMP STATION CONTROL PANEL
P-2	SEWAGE PUMP	480/3	15	21A	15HP	VFD	CONTROL PANEL	N/A	N/A	N/A	VFD SUPPLIED WITH PUMP STATION CONTROL PANEL
P-3	SEWAGE PUMP	480/3	15	21A	15HP	VFD	CONTROL PANEL	N/A	N/A	N/A	VFD SUPPLIED WITH PUMP STATION CONTROL PANEL

W. L. BURLE
ENGINEERS, P.A.
111 South Walnut Street
Greenville, MS 38701

JOSEPH W. BOWMAN
LICENSED PROFESSIONAL ENGINEER
25322
STATE OF MISSISSIPPI
04/29/2024

GS#323-024 ARPA INFR. - WASTE CENT. TREATMENT
SOUTH MISSISSIPPI CORRECTIONAL INSTITUTE
LEAKESVILLE, MISSISSIPPI

Burle Proj. No.: 08194-1-0122
File Name: E-310 ENLARGED PLAN - INFLUENT PUMP STATION.DWG
Date: 04/29/2024
Scale: AS SHOWN
Drawn by: JWB
Checked: JWB
Revisions:
Revisions:
Revisions:

ATWELL & GENT
ELECTRICAL & CONSULTING ENGINEERS
A&G PROJECT #324F6012

ENLARGED PLAN - INFLUENT PUMP STATION

E-310
Drawing Number

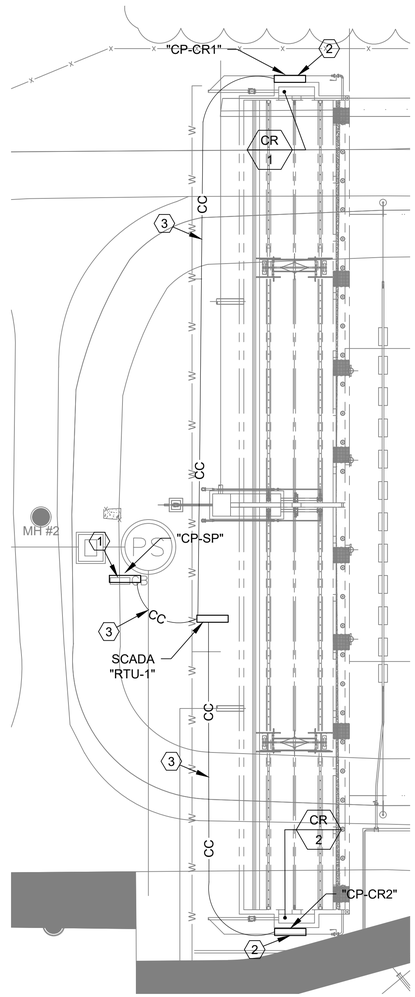

ENLARGED PLAN - CLARIFIERS

SCALE: 1/16"=1'-0"

GENERAL NOTES

1. REFER TO SHEET E-201 FOR ELECTRICAL SITE PLAN.
2. REFER TO SHEET E-202 FOR SCADA SYSTEM PLAN.
3. REFER TO SHEET E-205 FOR MECHANICAL EQUIPMENT SCHEDULE AND CONTROL PANEL SCHEDULE FOR CONDUIT AND WIRE REQUIREMENTS.
4. REFER TO SHEET E-206 FOR PANELBOARD SCHEDULES.
5. REFER TO SHEET E-203 FOR POWER RISER DIAGRAM.
6. REFER TO SPECIFICATIONS FOR CONDUIT AND CONDUCTOR GENERAL REQUIREMENTS.

NUMBERED NOTES

1. SCUM PUMP STATION. PROVIDE SEAL OFF FITTINGS AND JUNCTION BOX SIMILAR TO SHEET E-310. REFER TO E-205 FOR MECHANICAL EQUIPMENT SCHEDULE. SCUM PUMP CONTROL PANEL "CP-SP" FED FROM CONTROL "CP-BS" FOR THE BIOLAC SYSTEM. REFER TO E-501 FOR LOCATION OF CONTROL PANEL "CP-BS" IN FILTER BUILDING.
2. RAKE CONTROL PANEL FED FROM CONTROL PANEL "CP-BS" FOR THE BIOLAC SYSTEM. REFER TO E-501 FOR LOCATION OF CONTROL PANEL "CP-BS" IN FILTER BUILDING.
3. UNDERGROUND SCADA CONDUIT & CONDUCTORS FOR CONNECTIONS TO EACH CONTROL PANEL. REFER TO SPECIFICATIONS.

W. L. BURLE
ENGINEERS, P.A.
111 South Walnut Street
Greenville, MS 38701

JOSEPH W. BOWMAN
LICENSED PROFESSIONAL ENGINEER
25322
STATE OF MISSISSIPPI
04/29/2024

GS#323-024 ARPA INFR. - WASTE CENT. TREATMENT
SOUTH MISSISSIPPI CORRECTIONAL INSTITUTE
LEAKESVILLE, MISSISSIPPI

Burle Proj. No.:	08194-1-0122
File Name:	E-404 ENLARGED PLAN - CLARIFIERS.DWG
Date:	04/29/2024
Scale:	AS SHOWN
Drawn by:	JWB
Checked:	JWB
Revisions:	
Revisions:	
Revisions:	

ATWELL & GENT
ELECTRICAL & CONSULTING ENGINEERS
A&G PROJECT #324F6012

ENLARGED PLAN - CLARIFIERS

E-404

Drawing Number

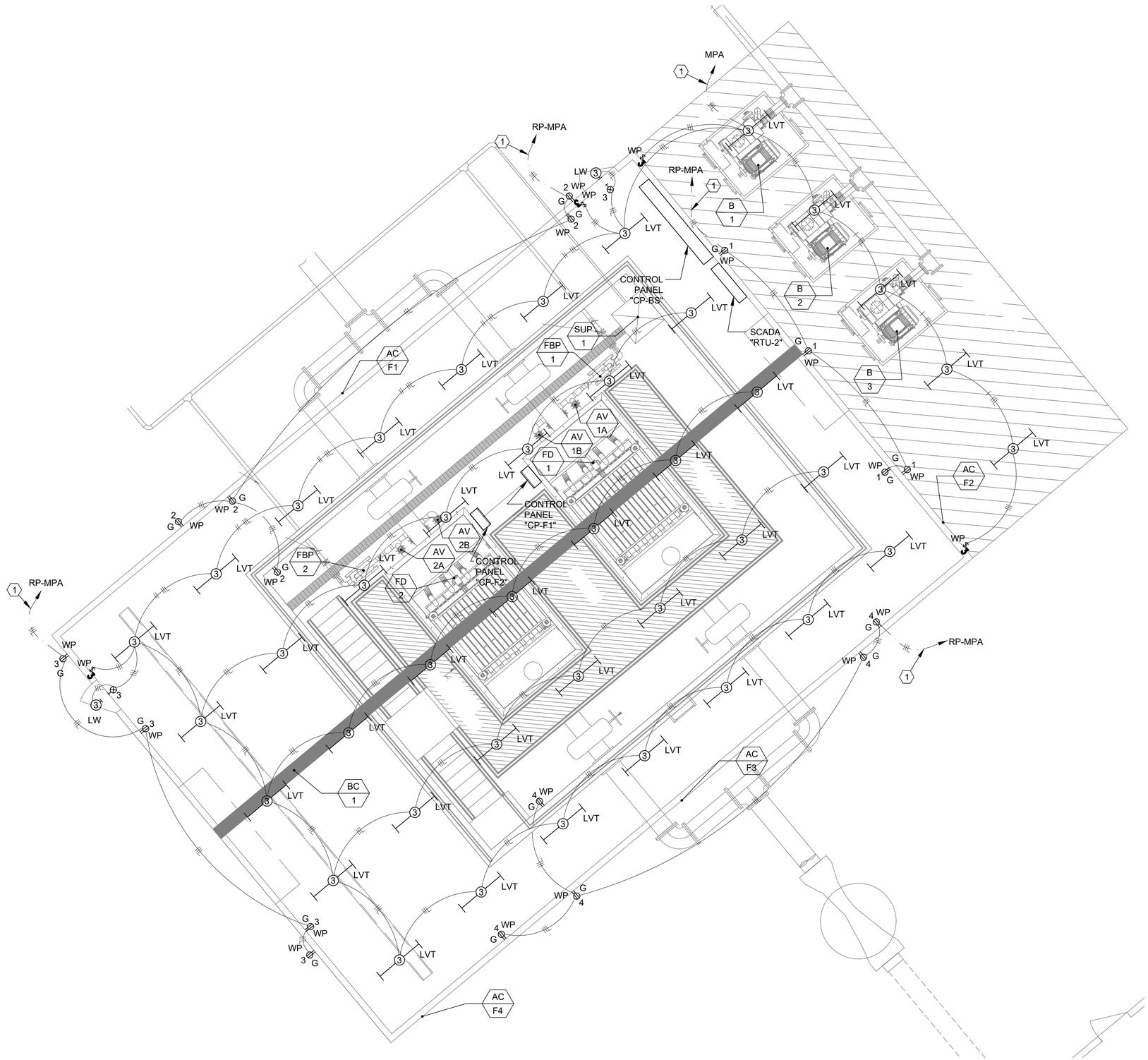

GENERAL NOTES

1. REFER TO SHEET E-201 FOR ELECTRICAL SITE PLAN.
2. REFER TO SHEET E-202 FOR SCADA SYSTEM PLAN.
3. REFER TO SHEET E-205 FOR MECHANICAL EQUIPMENT SCHEDULE AND CONTROL PANEL SCHEDULE FOR CONDUIT AND WIRE REQUIREMENTS.
4. REFER TO SHEET E-206 FOR PANELBOARD SCHEDULES.
5. REFER TO SHEET E-203 FOR POWER RISER DIAGRAM.
6. REFER TO SPECIFICATIONS FOR CONDUIT AND CONDUCTOR GENERAL REQUIREMENTS.

NUMBERED NOTES

(1) UNDERGROUND BRANCH CIRCUIT HOMERUNS SHALL BE MINIMUM 2#10, 1#10G - 3/4"C.

ENLARGED PLAN - FILTERS & BLOWERS

SCALE: 1/4"=1'-0"

W. L. BURLE
ENGINEERS, P.A.
111 South Walnut Street
Greenville, MS 38701

JOSEPH W. BOWMAN
LICENSED PROFESSIONAL ENGINEER
25322
STATE OF MISSISSIPPI
04/29/2024

GS#323-024 ARPA INFR. - WASTE CENT. TREATMENT
SOUTH MISSISSIPPI CORRECTIONAL INSTITUTE
LEAKESVILLE, MISSISSIPPI

Burle Proj. No.:	08194-1-0122
File Name:	E-501 ENLARGED PLAN - FILTERS & BLOWERS.DWG
Date:	04/29/2024
Scale:	AS SHOWN
Drawn by:	JWB
Checked:	JWB
Revisions:	
Revisions:	
Revisions:	

ATWELL & GENT
ELECTRICAL & CONSULTING ENGINEERS
A&G PROJECT #324F6012

ENLARGED PLAN - FILTERS & BLOWERS

E-501

Drawing Number

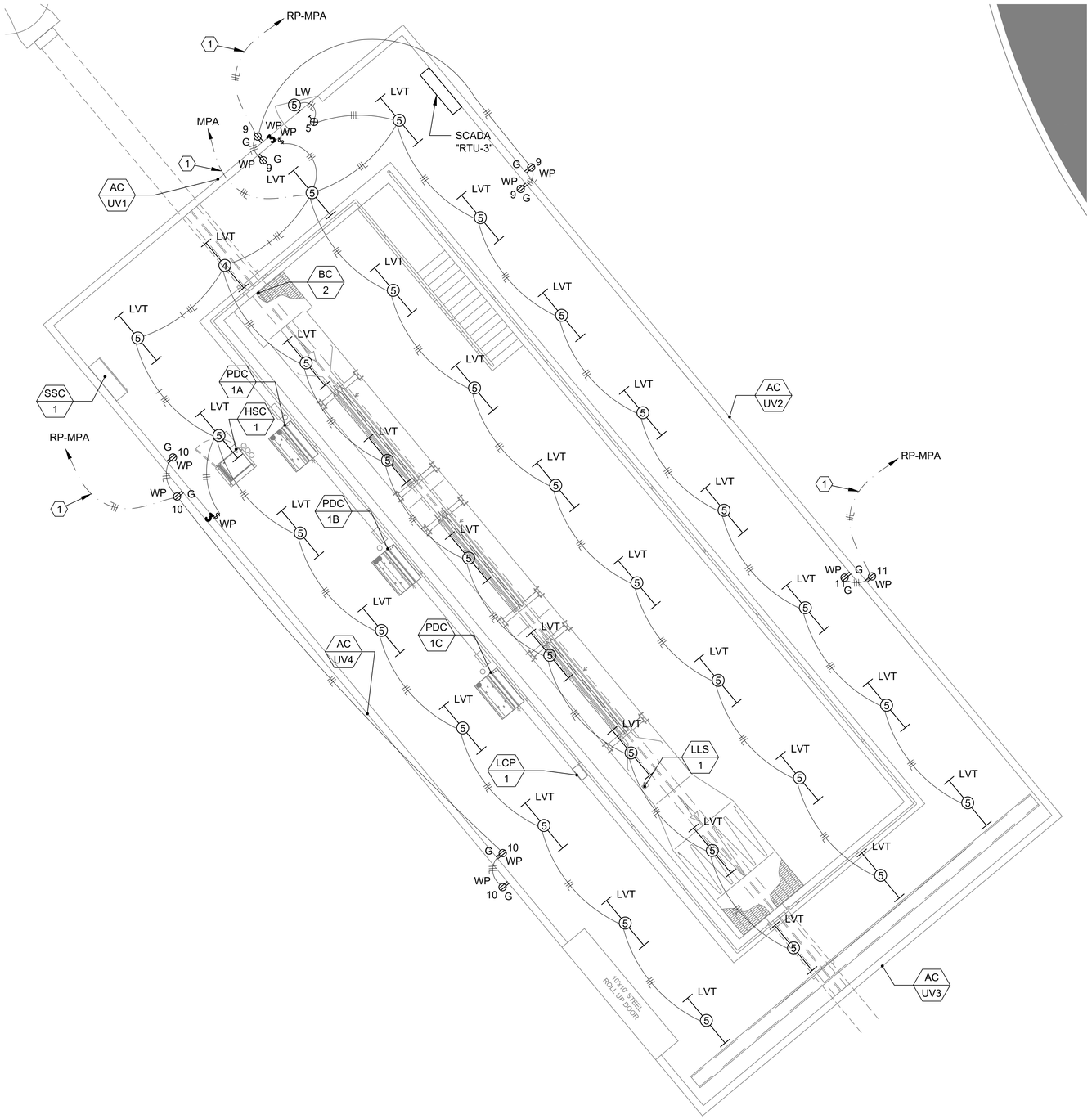

ENLARGED PLAN - UV DISINFECTION SYSTEM

SCALE: 1/4"=1'-0"

GENERAL NOTES

1. REFER TO SHEET E-201 FOR ELECTRICAL SITE PLAN.
2. REFER TO SHEET E-202 FOR SCADA SYSTEM PLAN.
3. REFER TO SHEET E-205 FOR MECHANICAL EQUIPMENT SCHEDULE AND CONTROL PANEL SCHEDULE FOR CONDUIT AND WIRE REQUIREMENTS.
4. REFER TO SHEET E-206 FOR PANELBOARD SCHEDULES.
5. REFER TO SHEET E-203 FOR POWER RISER DIAGRAM.
6. REFER TO SPECIFICATIONS FOR CONDUIT AND CONDUCTOR GENERAL REQUIREMENTS.

NUMBERED NOTES

(1) UNDERGROUND BRANCH CIRCUIT HOMERUNS SHALL BE MINIMUM 2#10, 1#10G - 3/4"C.

W. L. BURLE
ENGINEERS, P.A.
111 South Walnut Street
Greenville, MS 38701

JOSEPH W. BOWMAN
LICENSED PROFESSIONAL ENGINEER
25322
STATE OF MISSISSIPPI
04/29/2024

GS#323-024 ARPA INFR. - WASTE
CENT. TREATMENT
SOUTH MISSISSIPPI CORRECTIONAL INSTITUTE
LEAKESVILLE, MISSISSIPPI

Burle Proj. No.:	08194-1-0122
File Name:	E-701 ENLARGED PLAN - UV DISINFECTION.DWG
Date:	04/29/2024
Scale:	AS SHOWN
Drawn by:	JWB
Checked:	JWB
Revisions:	
Revisions:	
Revisions:	

ATWELL & GENT
ELECTRICAL & CONSULTING ENGINEERS
A&G PROJECT #324F6012

ENLARGED PLAN -
UV DISINFECTION SYSTEM

E-701

Drawing Number

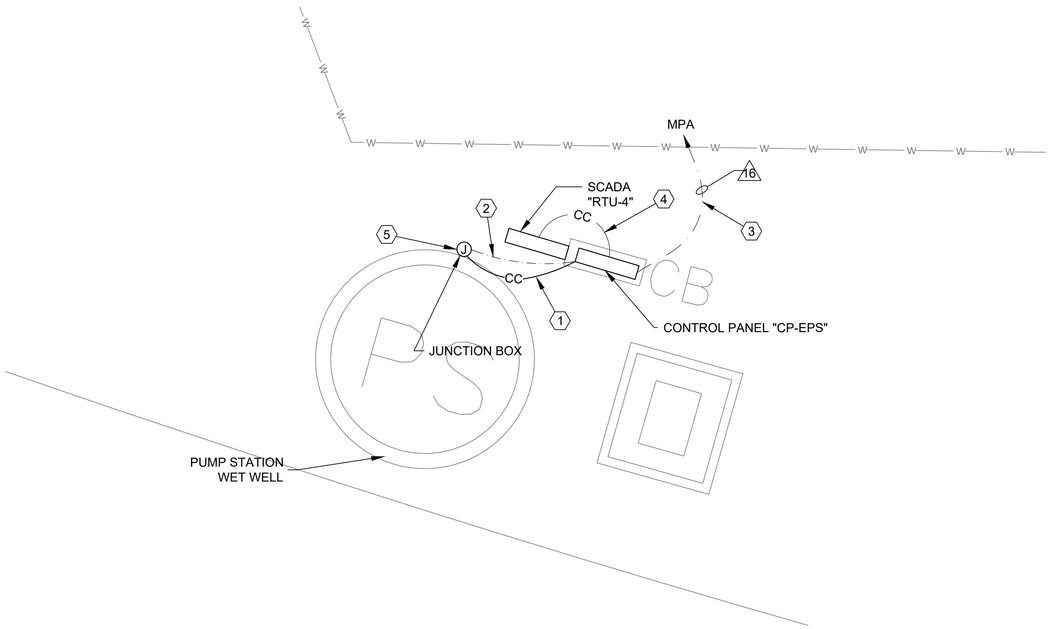

ENLARGED PLAN - EFFLUENT PUMP STATION

SCALE: 1/4"=1'-0"

GENERAL NOTES

1. REFER TO SHEET E-201 FOR ELECTRICAL SITE PLAN.
2. REFER TO SHEET E-202 FOR SCADA SYSTEM PLAN.
3. REFER TO SHEET E-203 FOR POWER RISER DIAGRAM.
4. REFER TO SHEET E-205 FOR MECHANICAL EQUIPMENT SCHEDULE AND CONTROL PANEL SCHEDULE FOR CONDUIT AND WIRE REQUIREMENTS.
5. REFER TO SHEET E-206 FOR PANELBOARD SCHEDULES.
6. REFER TO SPECIFICATIONS FOR CONDUIT AND CONDUCTOR GENERAL REQUIREMENTS.

NUMBERED NOTES

1. CONTROL CIRCUIT(S) TO WET WELL. PROVIDE A MINIMUM OF TWO (2) 1" CONDUITS. PROVIDE CONTROL CONDUCTORS FOR PUMP SEAL FAILURES, FLOAT(S), TRANSDUCER, ETC. AS REQUIRED. VERIFY QUANTITY AND TYPE OF CONTROL CONDUCTORS WITH CONTROL SYSTEM SUPPLIER BEFORE INSTALLATION.
2. SUBMERSIBLE PUMPS FEEDER CIRCUITS. (TYPICAL)
3. UNDERGROUND POWER FEEDER TO PANEL "DPB". REFER TO SHEET E-203 FOR POWER RISER DIAGRAM CONDUIT & WIRE SCHEDULE.
4. UNDERGROUND SCADA CABLES TO RTU-4. REFER TO SPECIFICATIONS.
5. JUNCTION BOX, NEMA 4X FIBERGLASS WITH TERMINAL BLOCKS FOR POWER & CONTROL CABLES. SIZE AS REQUIRED. SEAL ALL CONDUITS ENTERING WETWELL PER SPECIFICATIONS.
6. EXPLOSIVE GAS SEAL OFF FITTINGS (TYPICAL FOR POWER & CONTROL CONDUITS).
7. (3) #2 THWN, (1) #8 THWN (G), 1 1/2" CONDUIT PER PUMP FEEDER.

EFFLUENT PUMP STATION EQUIPMENT SCHEDULE

MARK	ITEM DESCRIPTION	VOLTS/ PHASE	HP	AMPS	STARTER			DISCONNECT SWITCH			REMARKS
					SIZE	TYPE	LOCATION	SIZE	FUSE	LOCATION	
P-1	SEWAGE PUMP	480/3	50	65A	50HP	VFD	CONTROL PANEL	N/A	N/A	N/A	VFD SUPPLIED WITH PUMP STATION CONTROL PANEL
P-2	SEWAGE PUMP	480/3	50	65A	50HP	VFD	CONTROL PANEL	N/A	N/A	N/A	VFD SUPPLIED WITH PUMP STATION CONTROL PANEL
P-3	SEWAGE PUMP	480/3	50	65A	50HP	VFD	CONTROL PANEL	N/A	N/A	N/A	VFD SUPPLIED WITH PUMP STATION CONTROL PANEL

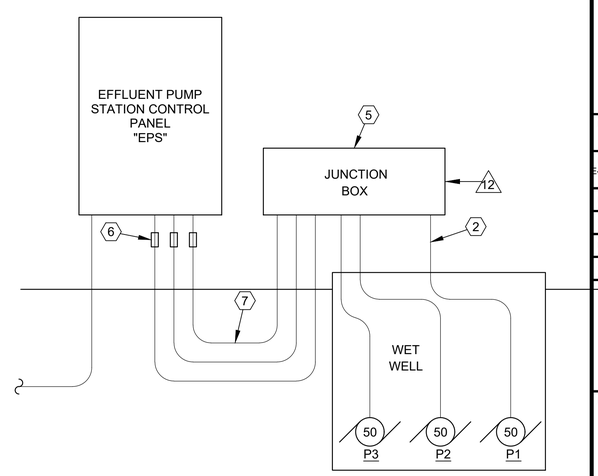

PUMP STATION POWER RISER DIAGRAM

SCALE: NONE

W. L. BURLE
ENGINEERS, P.A.
111 South Walnut Street
Greenville, MS 38701

JOSEPH W. BOWMAN
LICENSED PROFESSIONAL ENGINEER
25322
STATE OF MISSISSIPPI
04/29/2024

GS#323-024 ARPA INFR. - WASTE CENT. TREATMENT
SOUTH MISSISSIPPI CORRECTIONAL INSTITUTE
LEAKESVILLE, MISSISSIPPI

Burle Proj. No.: 08194-1-0122
File Name: E-801 ENLARGED PLAN - EFFLUENT PUMP STATION.DWG
Date: 04/29/2024
Scale: AS SHOWN
Drawn by: JWB
Checked: JWB
Revisions:
Revisions:
Revisions:

ATWELL & GENT
ELECTRICAL & CONSULTING ENGINEERS
A&G PROJECT #324F6012

ENLARGED PLAN - EFFLUENT PUMP STATION

E-801
Drawing Number